Compal Confidential

HQD70/HDQ71 Schematics Document

Intel Dothan Processor with 915PM/915GM + DDRII + ICH6M

(With ATi M26-P)

2005-07-29

REV: 2.0

Security Classification	Compal Secret Data		
Issued Date	2005/07/29	Deciphered Date	2006/07/29

THIS SHEET OF ENGINEERING DRAWING IS THE PROPRIETARY PROPERTY OF COMPAL ELECTRONICS, INC. AND CONTAINS CONFIDENTIAL AND TRADE SECRET INFORMATION. THIS SHEET MAY NOT BE TRANSFERED FROM THE CUSTODY OF THE COMPETENT DIVISION OF R&D DEPARTMENT EXCEPT AS AUTHORIZED BY COMPAL ELECTRONICS, INC. NEITHER THIS SHEET NOR THE INFORMATION IT CONTAINS MAY BE USED BY OR DISCLOSED TO ANY THIRD PARTY WITHOUT PRIOR WRITTEN CONSENT OF COMPAL ELECTRONICS, INC.

Compal Electronics, Inc.

Title: SCHEMATIC, M/B LA-2781

Size: B | Document Number: 401353 | Rev: B

Date: 星期日, 一月 01, 2006 | Sheet 1 of 50

Compal Confidential

Model Name : HDQ70
File Name : LA-2781

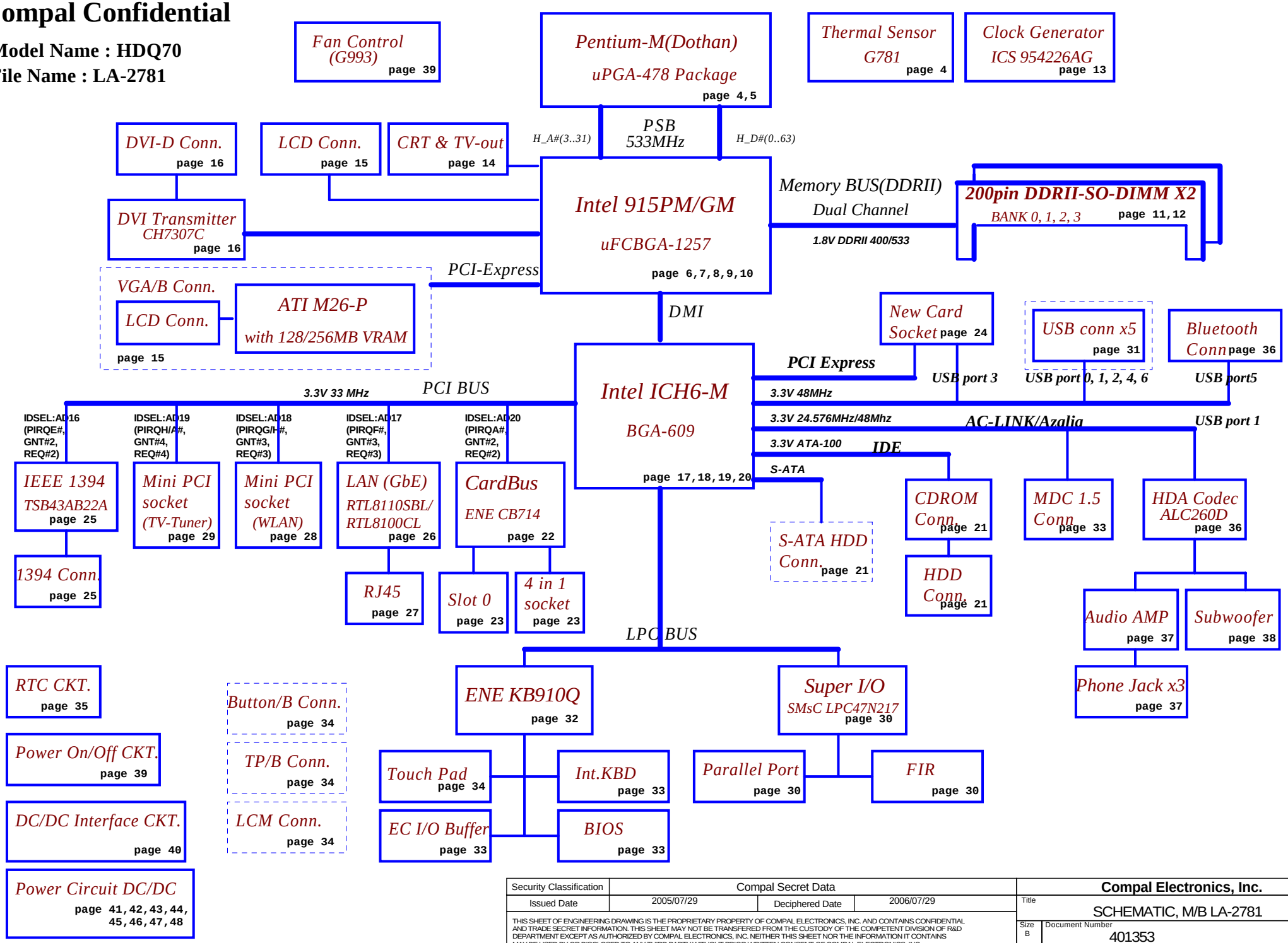

Security Classification	Compal Secret Data		
Issued Date	2005/07/29	Deciphered Date	2006/07/29

THIS SHEET OF ENGINEERING DRAWING IS THE PROPRIETARY PROPERTY OF COMPAL ELECTRONICS, INC. AND CONTAINS CONFIDENTIAL AND TRADE SECRET INFORMATION. THIS SHEET MAY NOT BE TRANSFERRED FROM THE CUSTODY OF THE COMPETENT DIVISION OF R&D DEPARTMENT EXCEPT AS AUTHORIZED BY COMPAL ELECTRONICS, INC. NEITHER THIS SHEET NOR THE INFORMATION IT CONTAINS MAY BE USED BY OR DISCLOSED TO ANY THIRD PARTY WITHOUT PRIOR WRITTEN CONSENT OF COMPAL ELECTRONICS, INC.

Compal Electronics, Inc.

Title: SCHEMATIC, M/B LA-2781

Size: B | Document Number: 401353 | Rev: B

Date: 星期日, 一月 01, 2006 | Sheet 2 of 50

Voltage Rails

Power Plane	Description	S1	S3	S5
VIN	Adapter power supply (19V)	N/A	N/A	N/A
B+	AC or battery power rail for power circuit.	N/A	N/A	N/A
+CPU_CORE	Core voltage for CPU	ON	OFF	OFF
+0.9VS	0.9V switched power rail for DDR terminator	ON	OFF	OFF
+1.05VS	1.05V switched power rail	ON	OFF	OFF
+1.5VALW	1.5V always on power rail	ON	ON	ON*
+1.5VS	1.5V switched power rail	ON	OFF	OFF
+1.8V	1.8V power rail for DDR	ON	ON	OFF
+1.8VS	1.8V switched power rail	ON	OFF	OFF
+2.5VS	2.5V switched power rail	ON	OFF	OFF
+3VALW	3.3V always on power rail	ON	ON	ON*
+3VS	3.3V switched power rail	ON	OFF	OFF
+5VALW	5V always on power rail	ON	ON	ON*
+5VS	5V switched power rail	ON	OFF	OFF
+VSB	VSB always on power rail	ON	ON	ON*
+RTCVCC	RTC power	ON	ON	ON

Note : ON* means that this power plane is ON only with AC power available, otherwise it is OFF.

External PCI Devices

Device	IDSEL#	REQ#/GNT#	Interrupts
CardBus(SD)	AD20	2	PIRQA/PIRQB
1394	AD16	0	PIRQE
LAN	AD17	3	PIRQF
Mini-PCI(WLAN)	AD18	1	PIRQG/PORQH
Mini-PCI(TV-Tuer)	AD19	4	PIRQH/PORQA

EC SM Bus1 address

Device	Address
Smart Battery	0001 011X b
EEPROM(24C16/02)	1010 000X b
GMT G781-1	1001 101X b

EC SM Bus2 address

Device	Address
GMT G781	1001 100X b

ICH6M SM Bus address

Device	Address
Clock Generator (ICS 954226)	1101 001Xb
DDR DIMM0	1001 000Xb
DDR DIMM2	1001 010Xb

STATE \ SIGNAL	SLP_S1#	SLP_S3#	SLP_S4#	SLP_S5#	+VALW	+V	+VS	Clock
Full ON	HIGH	HIGH	HIGH	HIGH	ON	ON	ON	ON
S1(Power On Suspend)	LOW	HIGH	HIGH	HIGH	ON	ON	ON	LOW
S3 (Suspend to RAM)	LOW	LOW	HIGH	HIGH	ON	ON	OFF	OFF
S4 (Suspend to Disk)	LOW	LOW	LOW	HIGH	ON	OFF	OFF	OFF
S5 (Soft OFF)	LOW	LOW	LOW	LOW	ON	OFF	OFF	OFF

Board ID / SKU ID Table for AD channel

Vcc	3.3V +/- 5%
Ra/Rc/Re	100K +/- 5%

Board ID	Rb / Rd / Rf	V_{AD_BID} min	V_{AD_BID} typ	V_{AD_BID} max
0	0	0 V	0 V	0 V
1	8.2K +/- 5%	0.216 V	0.250 V	0.289 V
2	18K +/- 5%	0.436 V	0.503 V	0.538 V
3	33K +/- 5%	0.712 V	0.819 V	0.875 V
4	56K +/- 5%	1.036 V	1.185 V	1.264 V
5	100K +/- 5%	1.453 V	1.650 V	1.759 V
6	200K +/- 5%	1.935 V	2.200 V	2.341 V
7	NC	2.500 V	3.300 V	3.300 V

BOARD ID Table

	Board ID	PCB Revision
	0	0.1
	1	0.2
	2	0.3
*	3	1.0
	4	
	5	
	6	
	7	

BTO Option Table

BTO Item	BOM Structure
VGA	PM@ GM@
LAN	8110S@ 8100C@
TV-TUNER	TV_TUNER@

SKU ID Table

SKU ID	SKU
0	PM
1	GM
2	
3	
4	
5	
6	
7	

Security Classification	Compal Secret Data		
Issued Date	2005/07/29	Deciphered Date	2006/07/29

THIS SHEET OF ENGINEERING DRAWING IS THE PROPRIETARY PROPERTY OF COMPAL ELECTRONICS, INC. AND CONTAINS CONFIDENTIAL AND TRADE SECRET INFORMATION. THIS SHEET MAY NOT BE TRANSFERED FROM THE CUSTODY OF THE COMPETENT DIVISION OF R&D DEPARTMENT EXCEPT AS AUTHORIZED BY COMPAL ELECTRONICS, INC. NEITHER THIS SHEET NOR THE INFORMATION IT CONTAINS MAY BE USED BY OR DISCLOSED TO ANY THIRD PARTY WITHOUT PRIOR WRITTEN CONSENT OF COMPAL ELECTRONICS, INC.

Compal Electronics, Inc.

Title: SCHEMATIC, M/B LA-2781

Size: B | Document Number: 401353 | Rev: B

Date: 星期日, 一月 01, 2006 | Sheet 3 of 50

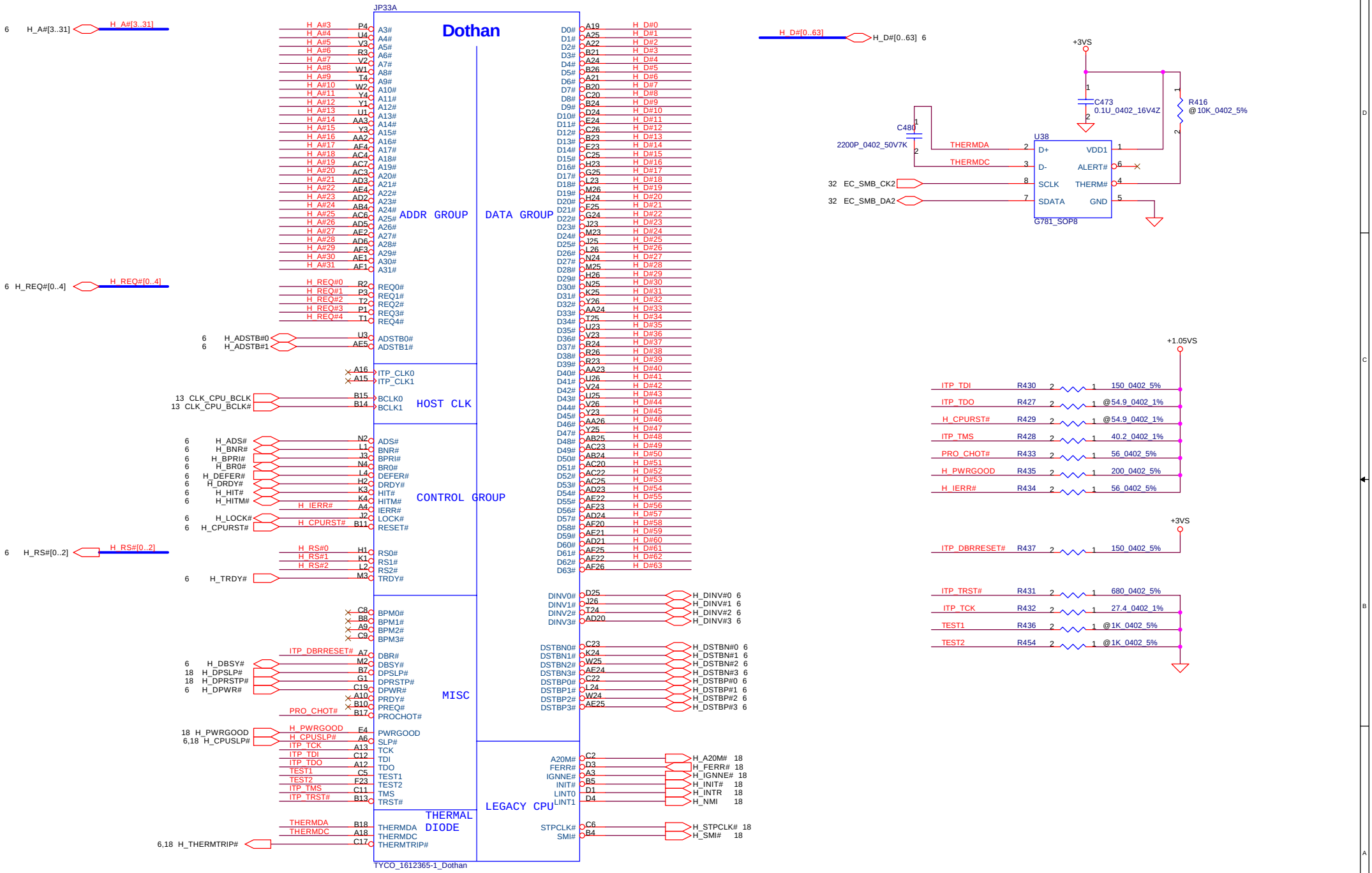

THERMDA & THERMDC Trace / Space = 10 / 10 mil

Security Classification	Compal Secret Data		
Issued Date	2005/07/29	Deciphered Date	2006/07/29

THIS SHEET OF ENGINEERING DRAWING IS THE PROPRIETARY PROPERTY OF COMPAL ELECTRONICS, INC. AND CONTAINS CONFIDENTIAL AND TRADE SECRET INFORMATION. THIS SHEET MAY NOT BE TRANSFERED FROM THE CUSTODY OF THE COMPETENT DIVISION OF R&D DEPARTMENT EXCEPT AS AUTHORIZED BY COMPAL ELECTRONICS, INC. NEITHER THIS SHEET NOR THE INFORMATION IT CONTAINS MAY BE USED BY OR DISCLOSED TO ANY THIRD PARTY WITHOUT PRIOR WRITTEN CONSENT OF COMPAL ELECTRONICS, INC.

Compal Electronics, Inc.

Title: SCHEMATIC, M/B LA-2781

Size: B | Document Number: 401353 | Rev: B

Date: 星期日, 一月 01, 2006 | Sheet 4 of 50

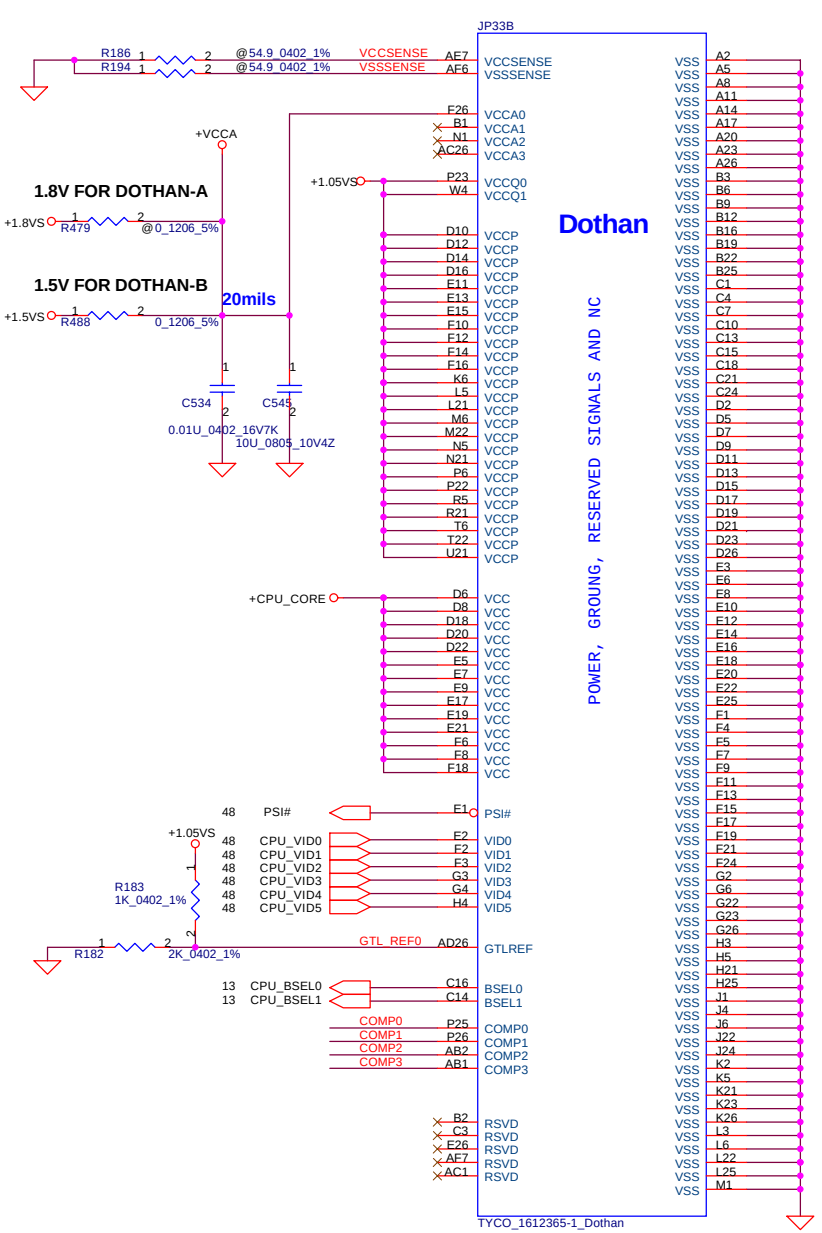

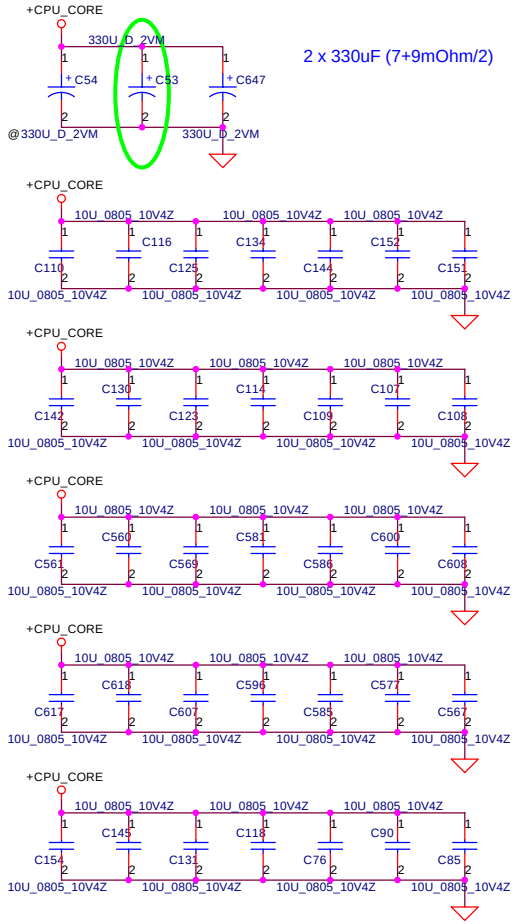

Vcc-core Decoupling	C,uF	ESR, mohm	ESL,nH
SPCAP,Polymer	2X330uF	7m ohm/2	3.5nH/2
MLCC 0805 X5R	35X10uF	5m ohm/35	0.6nH/35

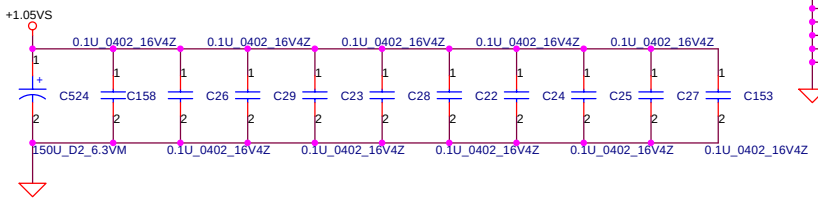

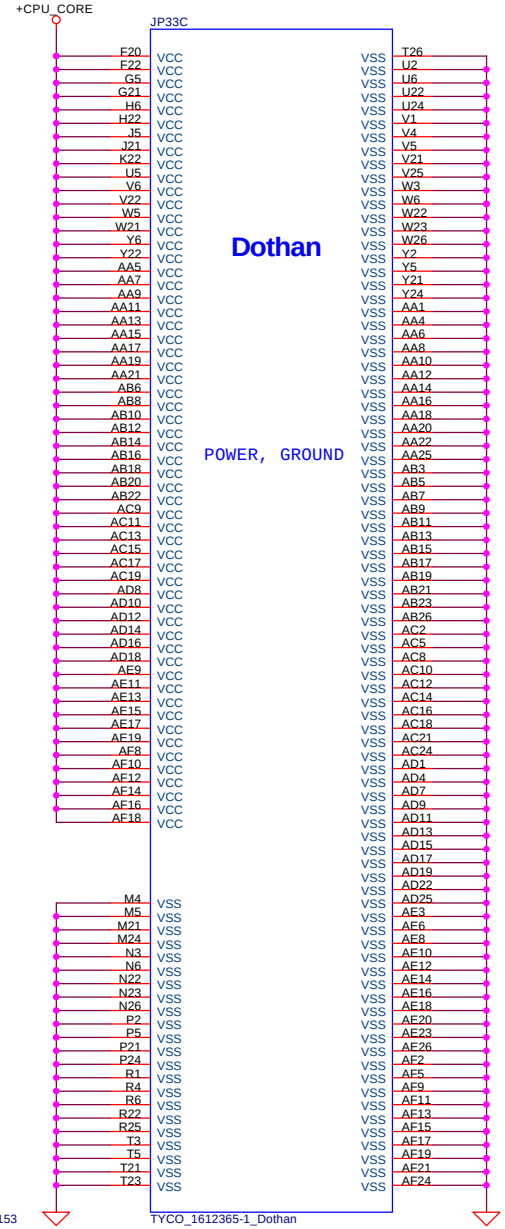

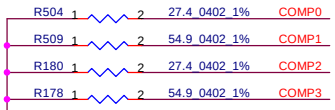

TRACE CLOSELY CPU < 0.5'

COMP0, COMP2 layout : Width 18mils and Space 25mils
COMP1, COMP3 layout : Space 25mils

Security Classification	Compal Secret Data		
Issued Date	2005/07/29	Deciphered Date	2006/07/29

THIS SHEET OF ENGINEERING DRAWING IS THE PROPRIETARY PROPERTY OF COMPAL ELECTRONICS, INC. AND CONTAINS CONFIDENTIAL AND TRADE SECRET INFORMATION. THIS SHEET MAY NOT BE TRANSFERED FROM THE CUSTODY OF THE COMPETENT DIVISION OF R&D DEPARTMENT EXCEPT AS AUTHORIZED BY COMPAL ELECTRONICS, INC. NEITHER THIS SHEET NOR THE INFORMATION IT CONTAINS MAY BE USED BY OR DISCLOSED TO ANY THIRD PARTY WITHOUT PRIOR WRITTEN CONSENT OF COMPAL ELECTRONICS, INC.

Compal Electronics, Inc.

Title: SCHEMATIC, M/B LA-2781

Size: B | Document Number: 401353 | Rev: B

Date: 星期日, 一月 01, 2006 | Sheet 5 of 50

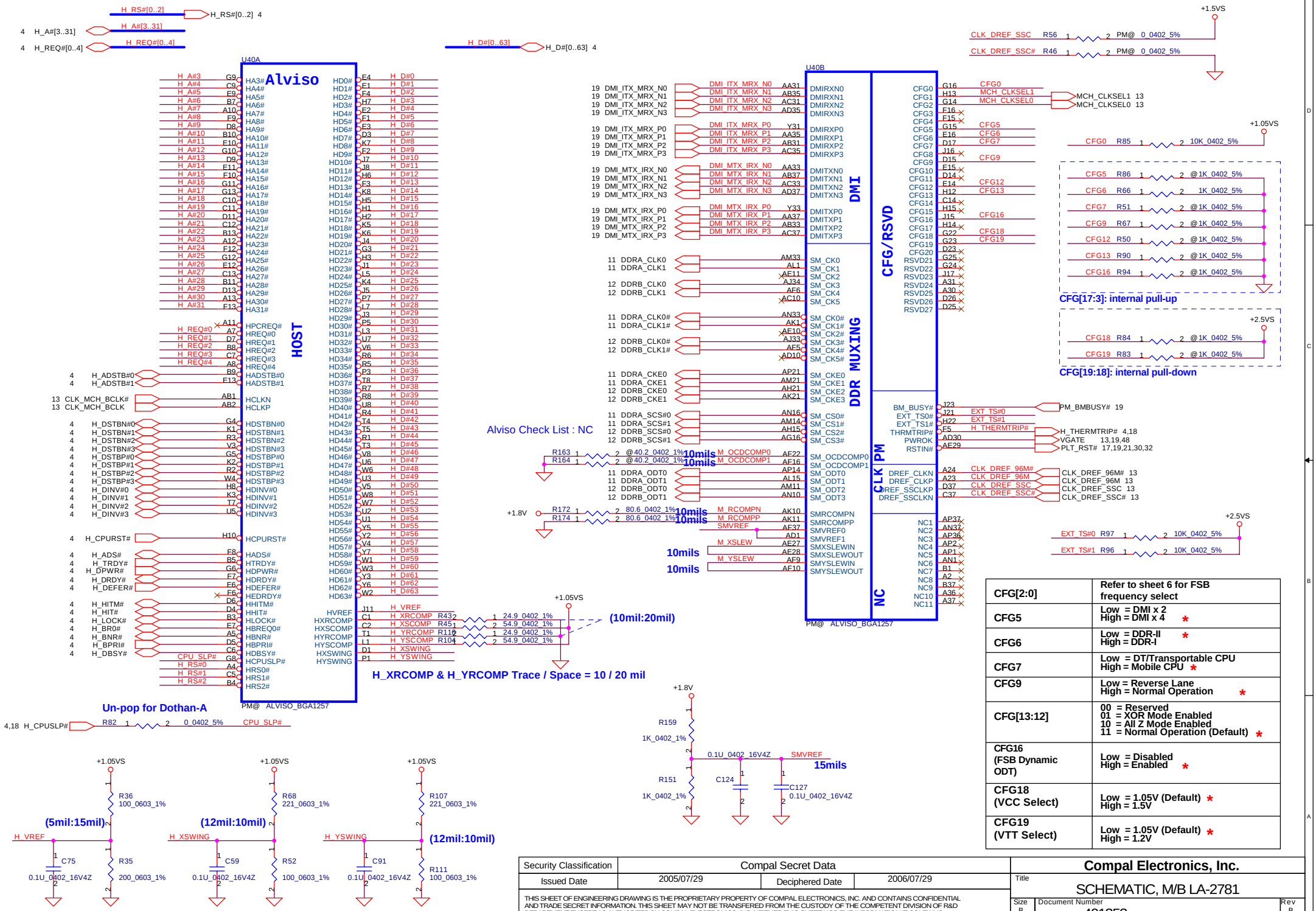

CFG[2:0]	Refer to sheet 6 for FSB frequency select
CFG5	Low = DMI x 2 High = DMI x 4 *
CFG6	Low = DDR-II * High = DDR-I
CFG7	Low = DT/Transportable CPU High = Mobile CPU *
CFG9	Low = Reverse Lane High = Normal Operation *
CFG[13:12]	00 = Reserved 01 = XOR Mode Enabled 10 = All Z Mode Enabled 11 = Normal Operation (Default) *
CFG16 (FSB Dynamic ODT)	Low = Disabled High = Enabled *
CFG18 (VCC Select)	Low = 1.05V (Default) * High = 1.5V
CFG19 (VTT Select)	Low = 1.05V (Default) * High = 1.2V

Security Classification	Compal Secret Data		
Issued Date	2005/07/29	Deciphered Date	2006/07/29

THIS SHEET OF ENGINEERING DRAWING IS THE PROPRIETARY PROPERTY OF COMPAL ELECTRONICS, INC. AND CONTAINS CONFIDENTIAL AND TRADE SECRET INFORMATION. THIS SHEET MAY NOT BE TRANSFERED FROM THE CUSTODY OF THE COMPETENT DIVISION OF R&D DEPARTMENT EXCEPT AS AUTHORIZED BY COMPAL ELECTRONICS, INC. NEITHER THIS SHEET NOR THE INFORMATION IT CONTAINS MAY BE USED BY OR DISCLOSED TO ANY THIRD PARTY WITHOUT PRIOR WRITTEN CONSENT OF COMPAL ELECTRONICS, INC.

Compal Electronics, Inc.

Title: SCHEMATIC, M/B LA-2781

Size: B | Document Number: 401353 | Rev: B

Date: 星期日, 一月 01, 2006 | Sheet 6 of 50

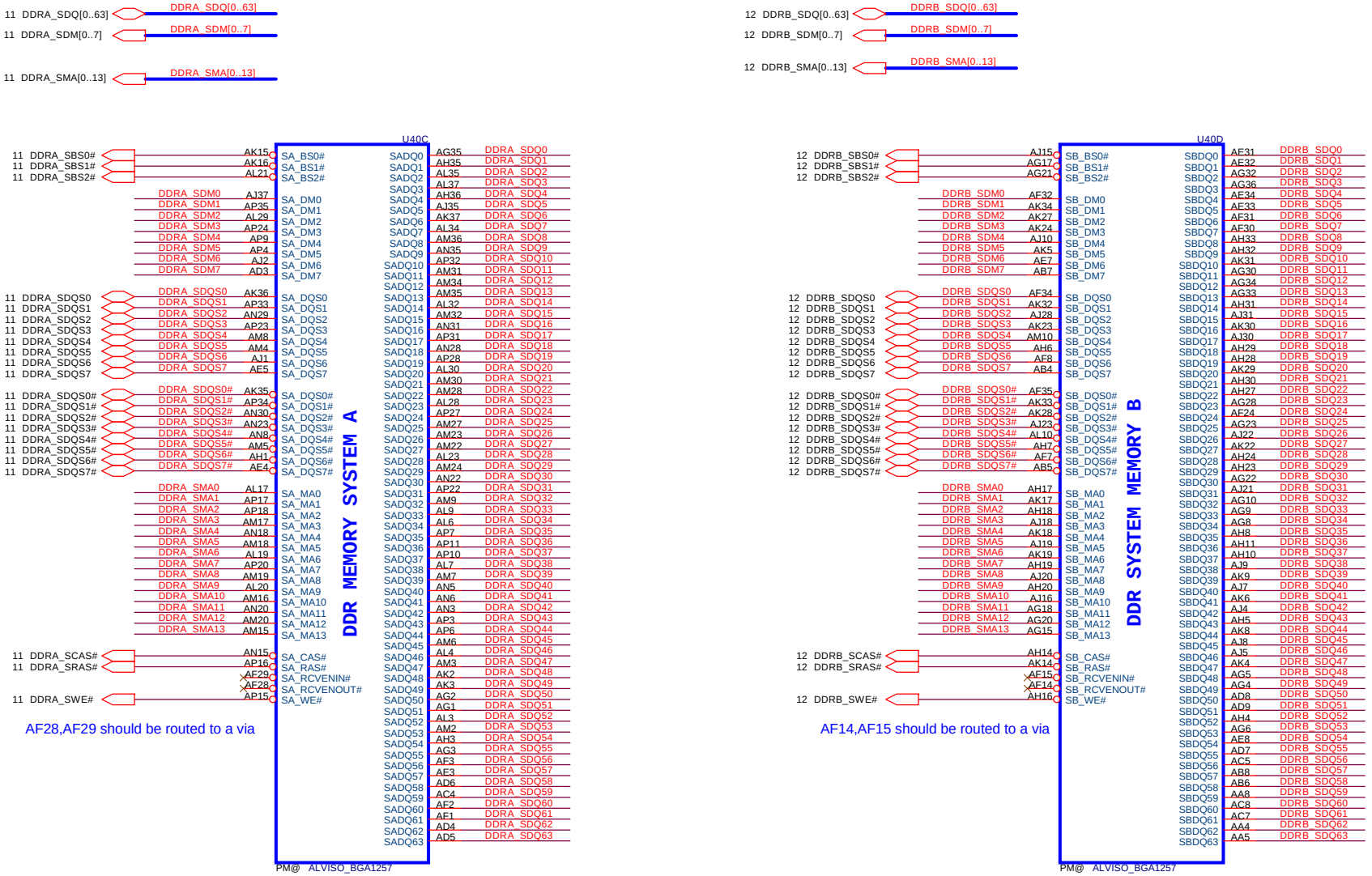

Security Classification	Compal Secret Data		
Issued Date	2005/07/29	Deciphered Date	2006/07/29

THIS SHEET OF ENGINEERING DRAWING IS THE PROPRIETARY PROPERTY OF COMPAL ELECTRONICS, INC. AND CONTAINS CONFIDENTIAL AND TRADE SECRET INFORMATION. THIS SHEET MAY NOT BE TRANSFERED FROM THE CUSTODY OF THE COMPETENT DIVISION OF R&D DEPARTMENT EXCEPT AS AUTHORIZED BY COMPAL ELECTRONICS, INC. NEITHER THIS SHEET NOR THE INFORMATION IT CONTAINS MAY BE USED BY OR DISCLOSED TO ANY THIRD PARTY WITHOUT PRIOR WRITTEN CONSENT OF COMPAL ELECTRONICS, INC.

Compal Electronics, Inc.

Title: SCHEMATIC, M/B LA-2781

Size: B | Document Number: 401353 | Rev: B

Date: 星期日, 一月 01, 2006 | Sheet 7 of 50

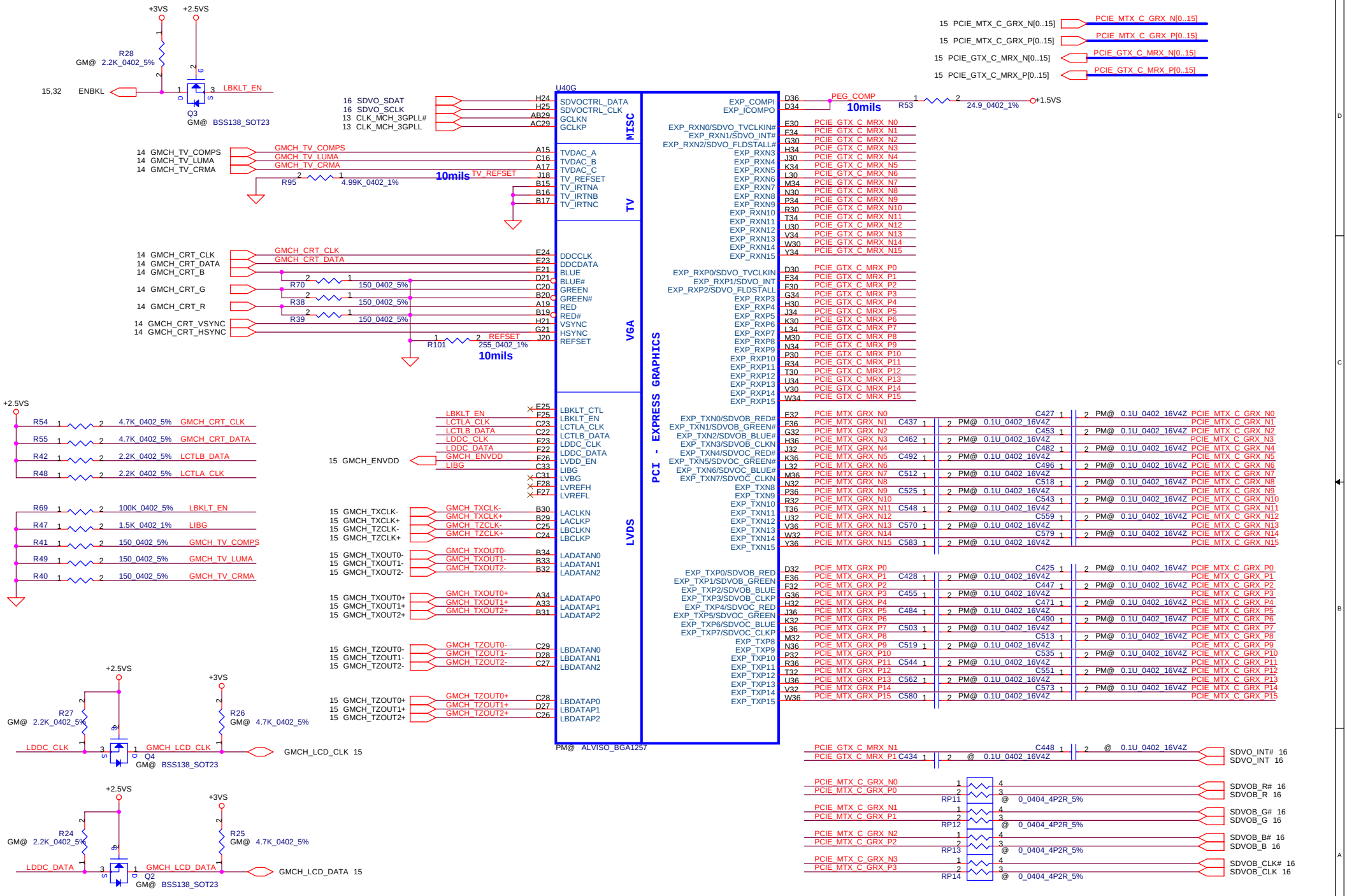

Security Classification	Compal Secret Data		
Issued Date	2005/07/29	Deciphered Date	2006/07/29

THIS SHEET OF ENGINEERING DRAWING IS THE PROPRIETARY PROPERTY OF COMPAL ELECTRONICS, INC. AND CONTAINS CONFIDENTIAL AND TRADE SECRET INFORMATION. THIS SHEET MAY NOT BE TRANSFERED FROM THE CUSTODY OF THE COMPETENT DIVISION OF R&D DEPARTMENT EXCEPT AS AUTHORIZED BY COMPAL ELECTRONICS, INC. NEITHER THIS SHEET NOR THE INFORMATION IT CONTAINS MAY BE USED BY OR DISCLOSED TO ANY THIRD PARTY WITHOUT PRIOR WRITTEN CONSENT OF COMPAL ELECTRONICS, INC.

Compal Electronics, Inc.

Title: SCHEMATIC, M/B LA-2781

Size: B | Document Number: 401353 | Rev: B

Date: 星期日, 一月 01, 2006 | Sheet 8 of 50

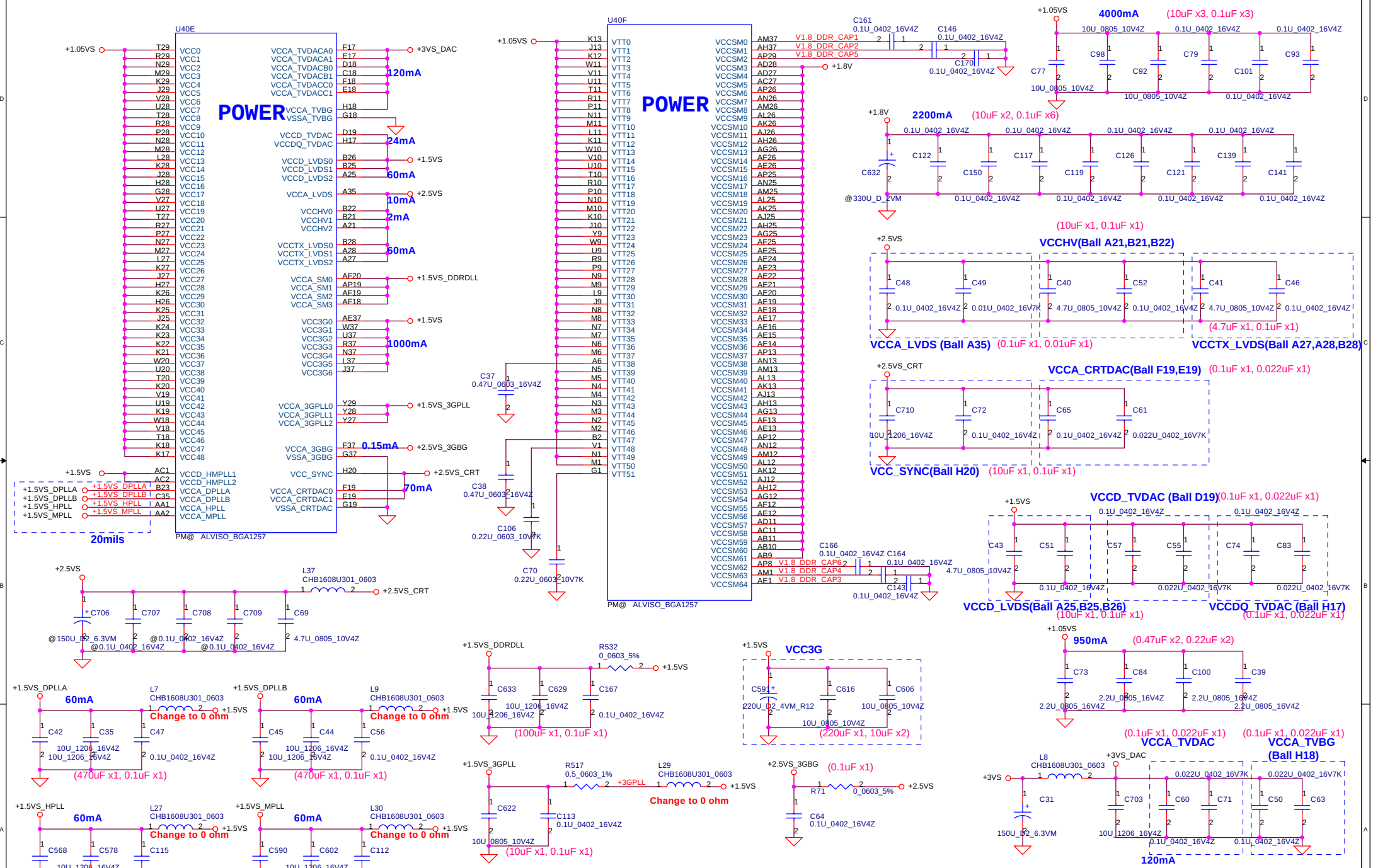

Security Classification	Compal Secret Data		
Issued Date	2005/07/29	Deciphered Date	2006/07/29

THIS SHEET OF ENGINEERING DRAWING IS THE PROPRIETARY PROPERTY OF COMPAL ELECTRONICS, INC. AND CONTAINS CONFIDENTIAL AND TRADE SECRET INFORMATION. THIS SHEET MAY NOT BE TRANSFERED FROM THE CUSTODY OF THE COMPETENT DIVISION OF R&D DEPARTMENT EXCEPT AS AUTHORIZED BY COMPAL ELECTRONICS, INC. NEITHER THIS SHEET NOR THE INFORMATION IT CONTAINS MAY BE USED BY OR DISCLOSED TO ANY THIRD PARTY WITHOUT PRIOR WRITTEN CONSENT OF COMPAL ELECTRONICS, INC.

Compal Electronics, Inc.

Title: SCHEMATIC, M/B LA-2781

Size: B | Document Number: 401353 | Rev: B

Date: 星期日, 一月 01, 2006 | Sheet 9 of 50

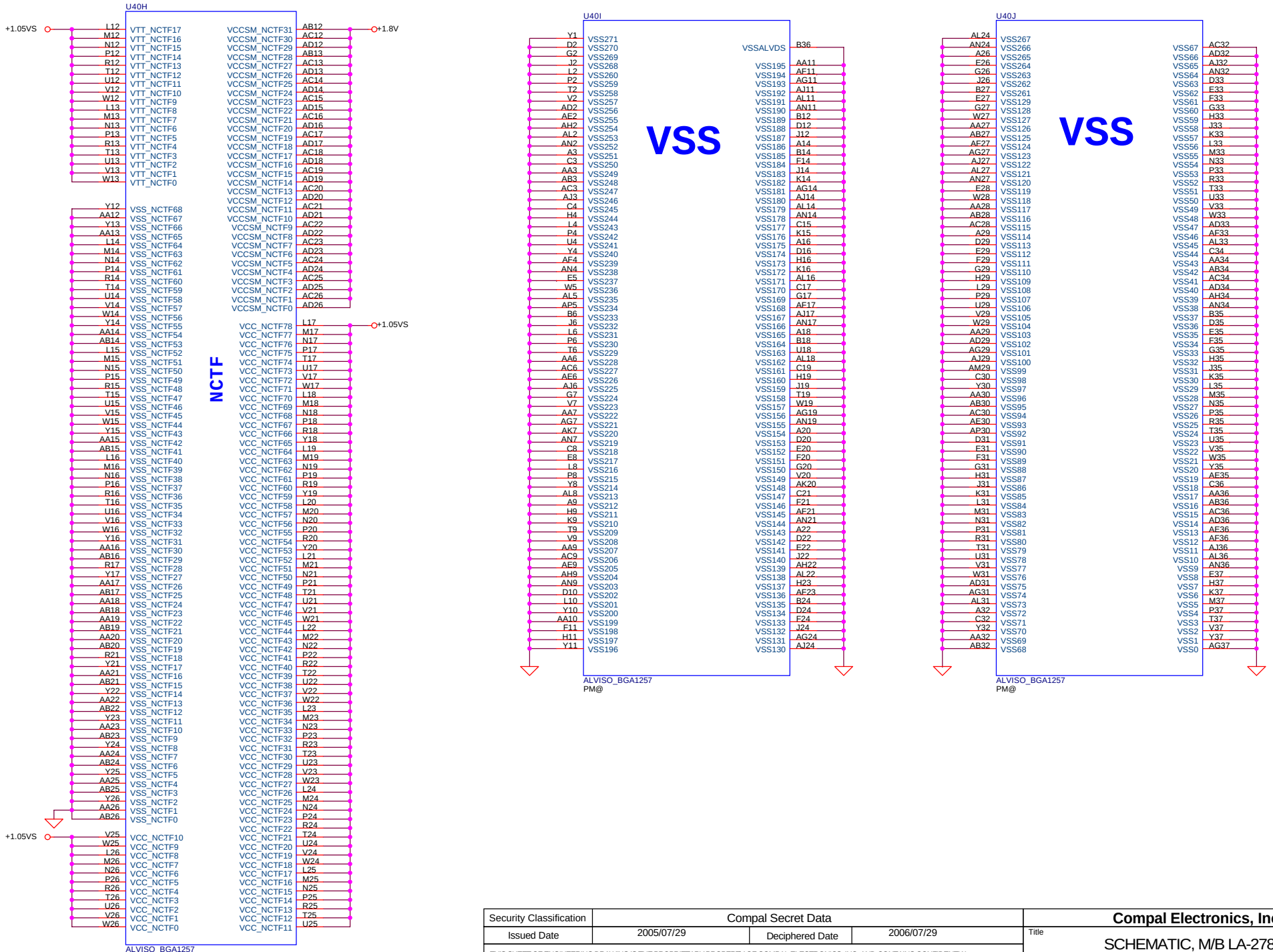

Security Classification	Compal Secret Data		
Issued Date	2005/07/29	Deciphered Date	2006/07/29

THIS SHEET OF ENGINEERING DRAWING IS THE PROPRIETARY PROPERTY OF COMPAL ELECTRONICS, INC. AND CONTAINS CONFIDENTIAL AND TRADE SECRET INFORMATION. THIS SHEET MAY NOT BE TRANSFERED FROM THE CUSTODY OF THE COMPETENT DIVISION OF R&D DEPARTMENT EXCEPT AS AUTHORIZED BY COMPAL ELECTRONICS, INC. NEITHER THIS SHEET NOR THE INFORMATION IT CONTAINS MAY BE USED BY OR DISCLOSED TO ANY THIRD PARTY WITHOUT PRIOR WRITTEN CONSENT OF COMPAL ELECTRONICS, INC.

Compal Electronics, Inc.

Title: SCHEMATIC, M/B LA-2781

Size: B | Document Number: 401353 | Rev: B

Date: 星期日, 一月 01, 2006 | Sheet 10 of 50

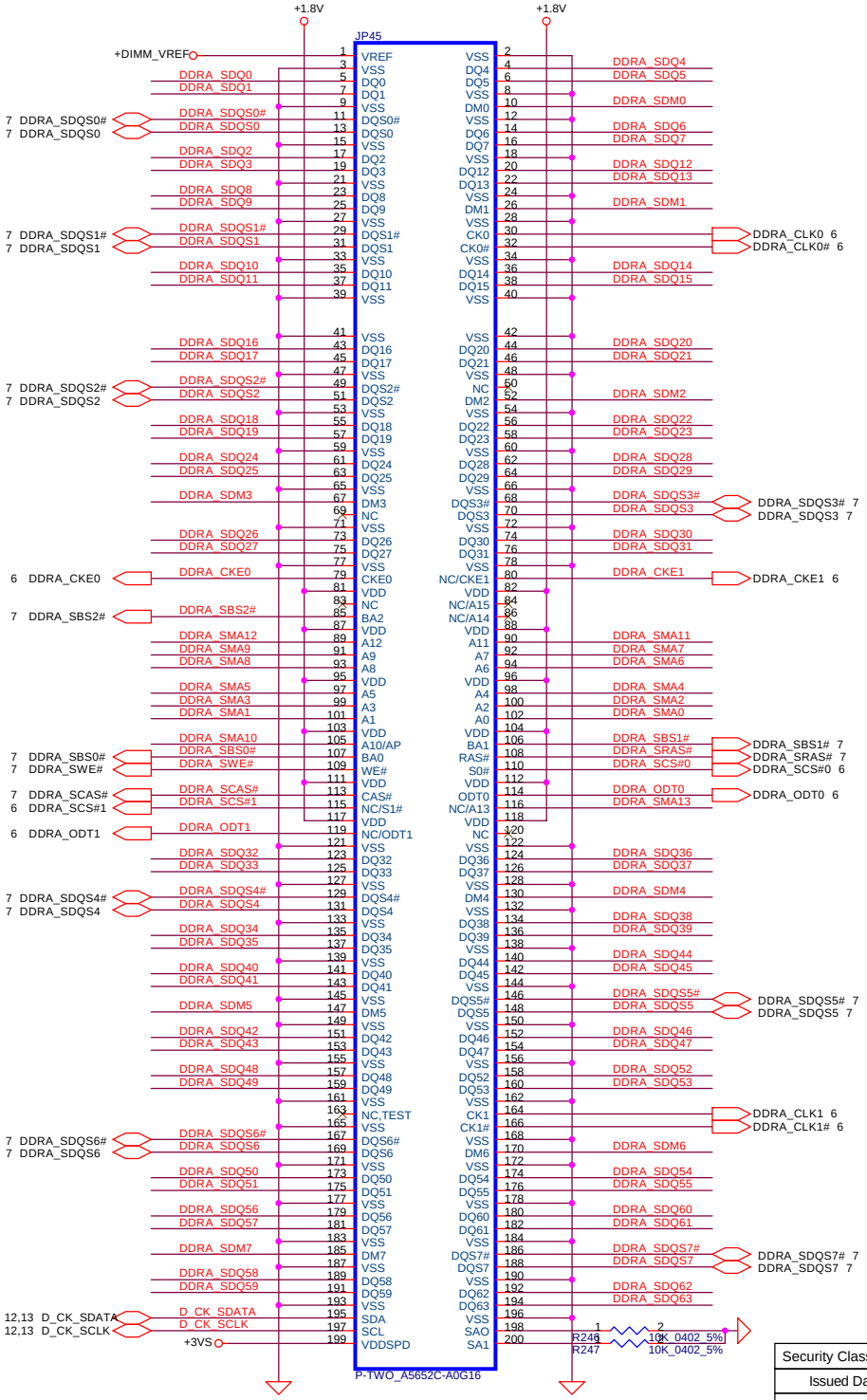

DIMM0 STD H:5.2mm (BOT)

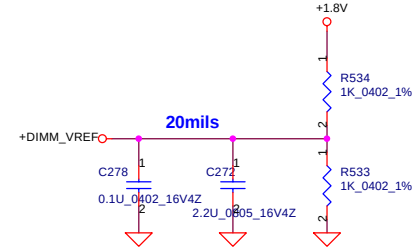

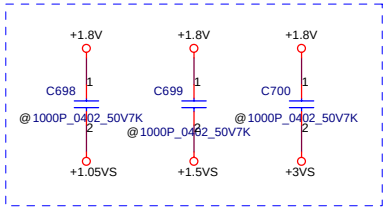

For EMI

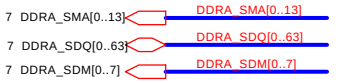

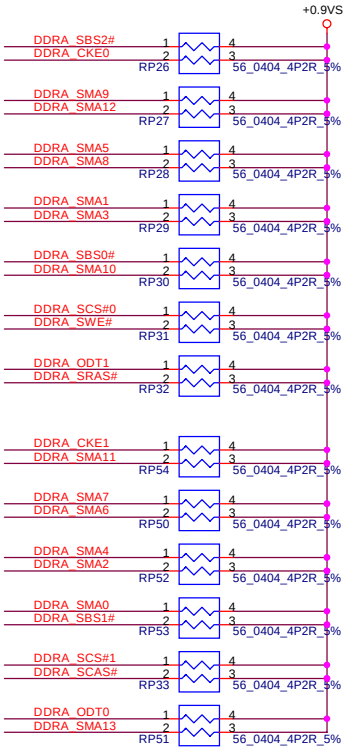

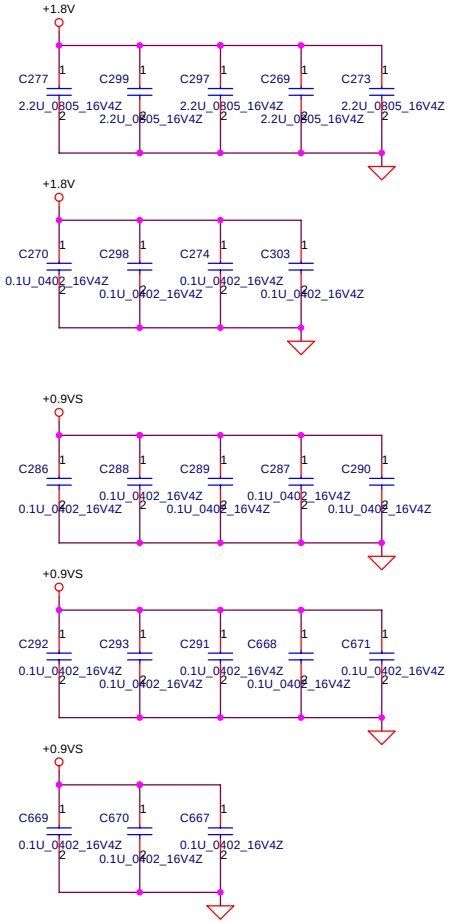

Security Classification	Compal Secret Data		
Issued Date	2005/07/29	Deciphered Date	2006/07/29

THIS SHEET OF ENGINEERING DRAWING IS THE PROPRIETARY PROPERTY OF COMPAL ELECTRONICS, INC. AND CONTAINS CONFIDENTIAL AND TRADE SECRET INFORMATION. THIS SHEET MAY NOT BE TRANSFERED FROM THE CUSTODY OF THE COMPETENT DIVISION OF R&D DEPARTMENT EXCEPT AS AUTHORIZED BY COMPAL ELECTRONICS, INC. NEITHER THIS SHEET NOR THE INFORMATION IT CONTAINS MAY BE USED BY OR DISCLOSED TO ANY THIRD PARTY WITHOUT PRIOR WRITTEN CONSENT OF COMPAL ELECTRONICS, INC.

Compal Electronics, Inc.

Title: SCHEMATIC, M/B LA-2781

Size: B | Document Number: 401353 | Rev: B

Date: 星期日, 一月 01, 2006 | Sheet 11 of 50

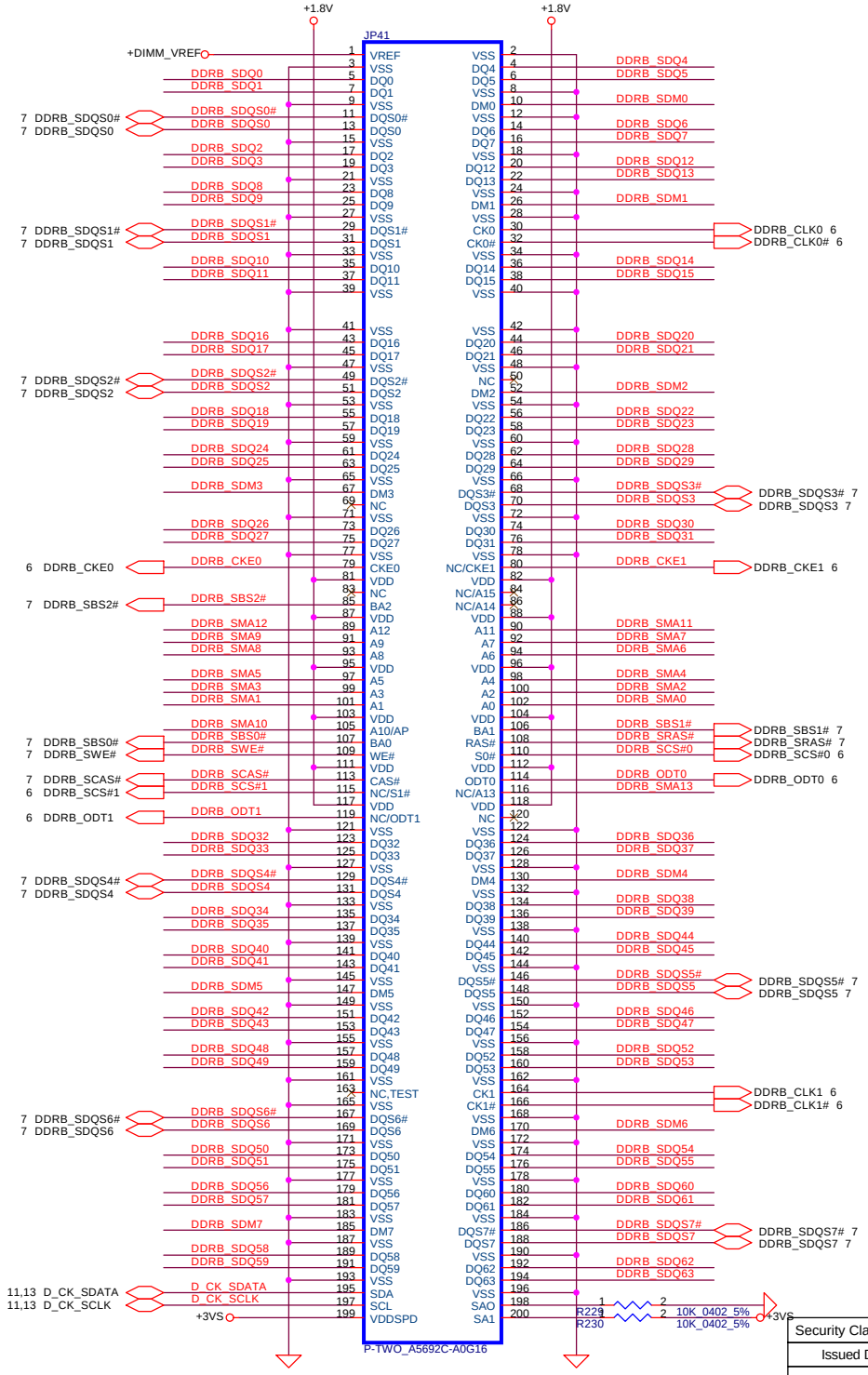

DIMM1 STD H:9.2mm (BOT)

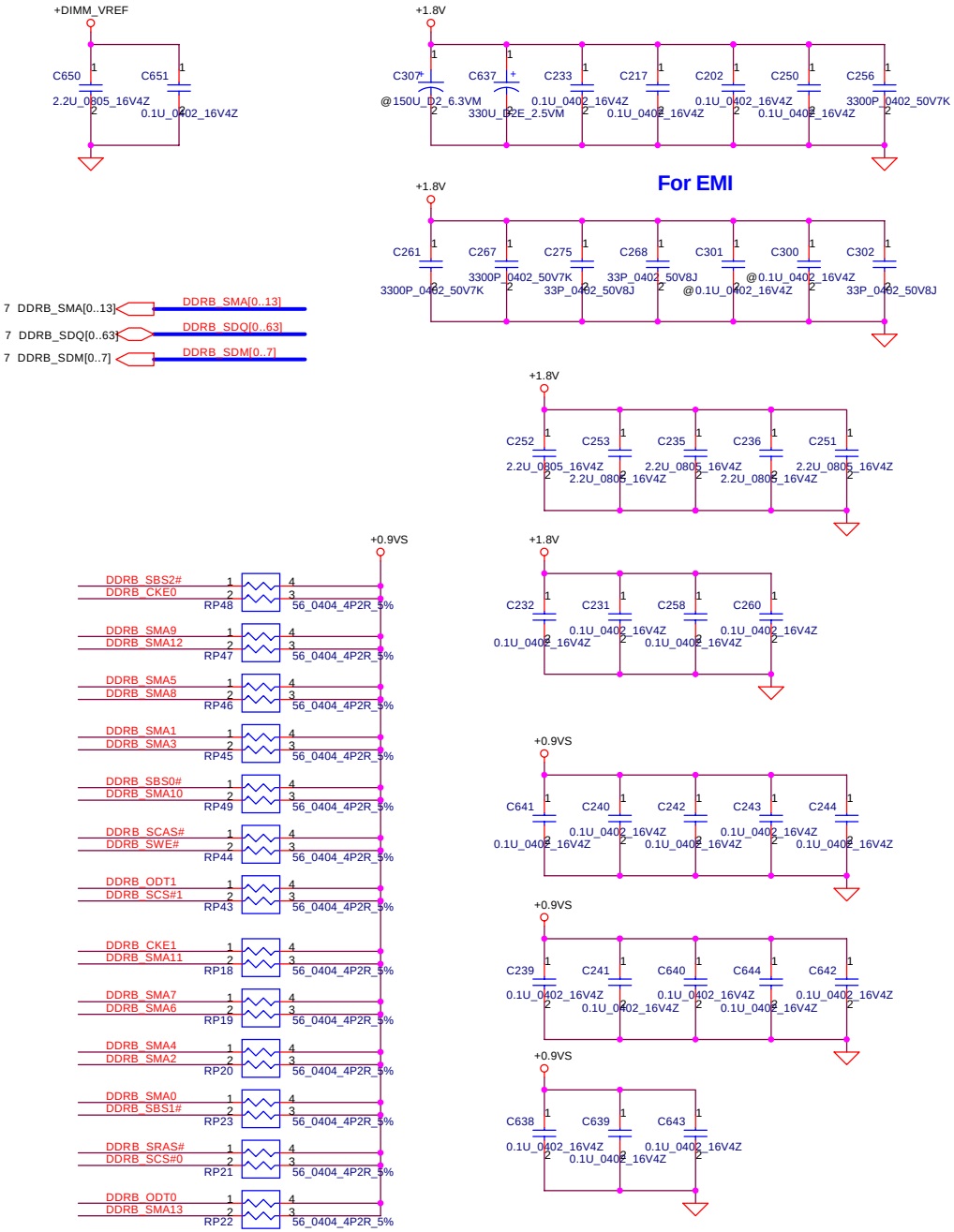

Security Classification	Compal Secret Data		
Issued Date	2005/07/29	Deciphered Date	2006/07/29

THIS SHEET OF ENGINEERING DRAWING IS THE PROPRIETARY PROPERTY OF COMPAL ELECTRONICS, INC. AND CONTAINS CONFIDENTIAL AND TRADE SECRET INFORMATION. THIS SHEET MAY NOT BE TRANSFERED FROM THE CUSTODY OF THE COMPETENT DIVISION OF R&D DEPARTMENT EXCEPT AS AUTHORIZED BY COMPAL ELECTRONICS, INC. NEITHER THIS SHEET NOR THE INFORMATION IT CONTAINS MAY BE USED BY OR DISCLOSED TO ANY THIRD PARTY WITHOUT PRIOR WRITTEN CONSENT OF COMPAL ELECTRONICS, INC.

Compal Electronics, Inc.

Title: SCHEMATIC, M/B LA-2781

Size: B | Document Number: 401353 | Rev: B

Date: 星期日, 一月 01, 2006 | Sheet 12 of 50

Clock Generator

FSC CLKSEL0	FSB CLKSEL1	FSA CLKSEL2	CPU MHz	SRC MHz	PCI MHz
1	0	1	100	100	33.3
* 0	0	1	133	100	33.3
0	1	1	166	100	33.3
0	1	0	200	100	33.3

Table : ICS 954226AG

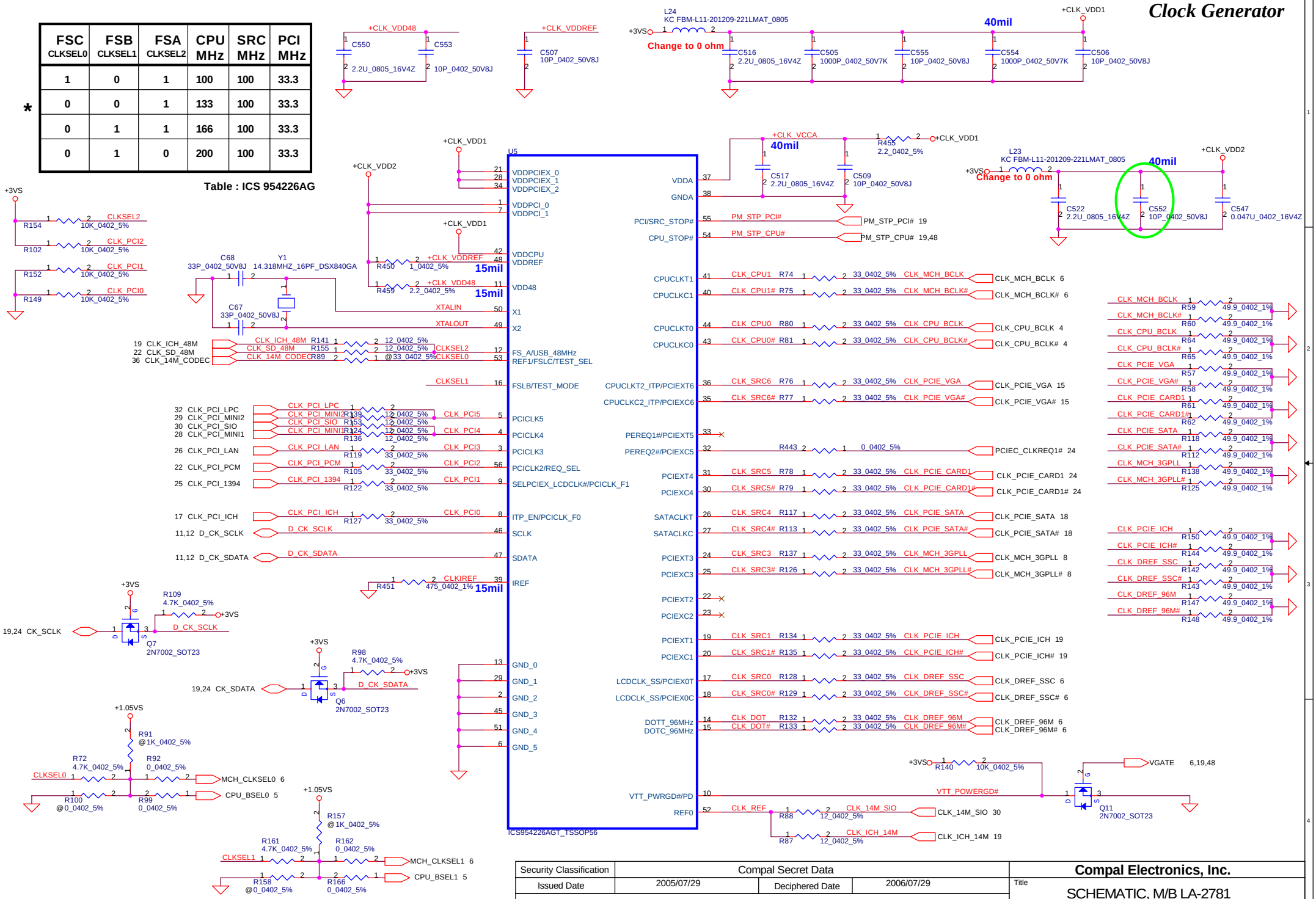

Security Classification	Compal Secret Data		
Issued Date	2005/07/29	Deciphered Date	2006/07/29

THIS SHEET OF ENGINEERING DRAWING IS THE PROPRIETARY PROPERTY OF COMPAL ELECTRONICS, INC. AND CONTAINS CONFIDENTIAL AND TRADE SECRET INFORMATION. THIS SHEET MAY NOT BE TRANSFERED FROM THE CUSTODY OF THE COMPETENT DIVISION OF R&D DEPARTMENT EXCEPT AS AUTHORIZED BY COMPAL ELECTRONICS, INC. NEITHER THIS SHEET NOR THE INFORMATION IT CONTAINS MAY BE USED BY OR DISCLOSED TO ANY THIRD PARTY WITHOUT PRIOR WRITTEN CONSENT OF COMPAL ELECTRONICS, INC.

Compal Electronics, Inc.

Title: SCHEMATIC, M/B LA-2781

Size: B | Document Number: 401353 | Rev: B

Date: 星期日, 一月 01, 2006 | Sheet 13 of 50

CRT Connector

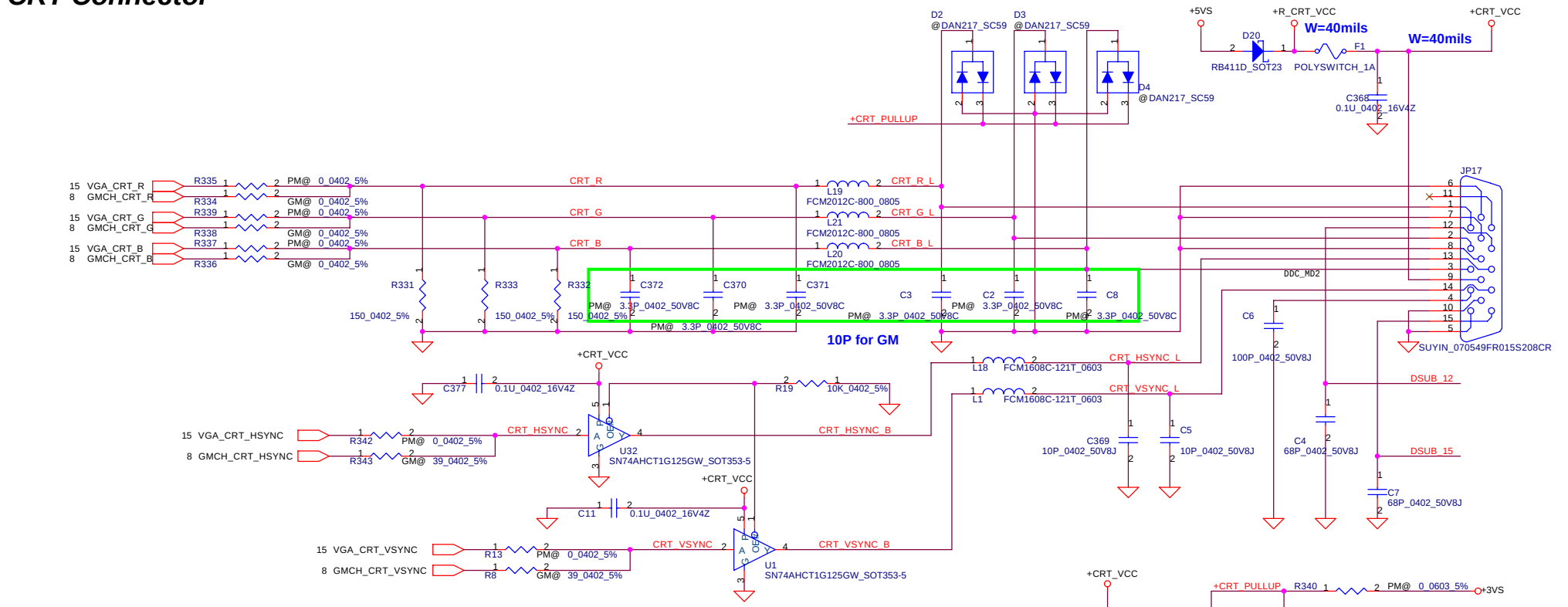

TV-OUT Conn.

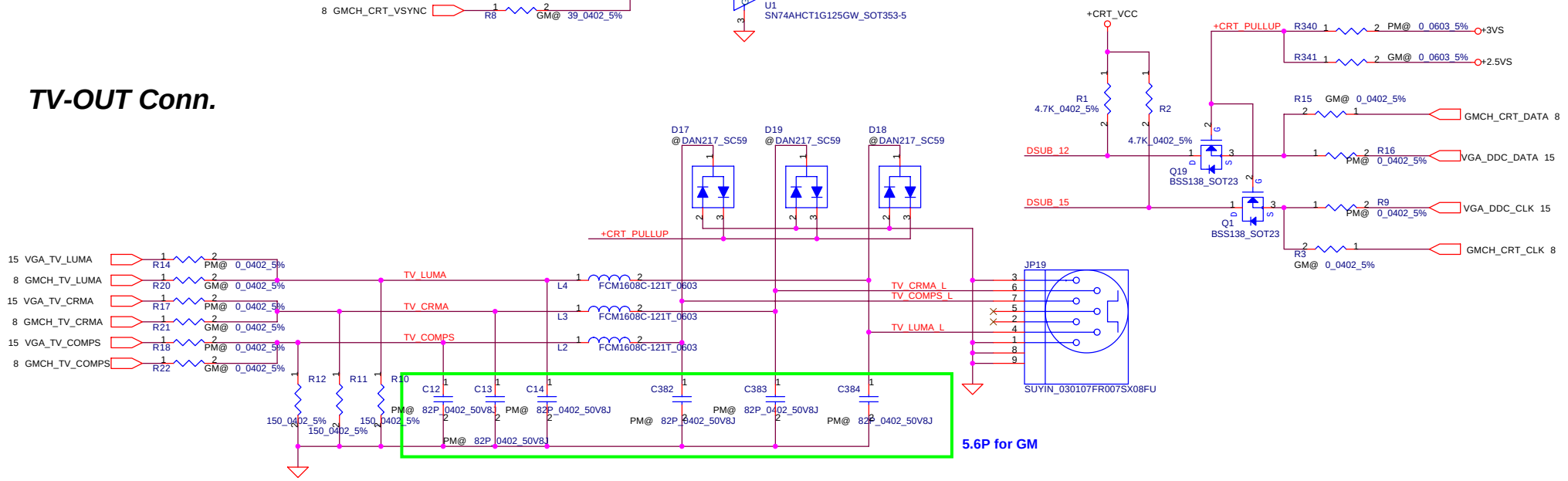

Security Classification	Compal Secret Data		
Issued Date	2005/07/29	Deciphered Date	2006/07/29

THIS SHEET OF ENGINEERING DRAWING IS THE PROPRIETARY PROPERTY OF COMPAL ELECTRONICS, INC. AND CONTAINS CONFIDENTIAL AND TRADE SECRET INFORMATION. THIS SHEET MAY NOT BE TRANSFERED FROM THE CUSTODY OF THE COMPETENT DIVISION OF R&D DEPARTMENT EXCEPT AS AUTHORIZED BY COMPAL ELECTRONICS, INC. NEITHER THIS SHEET NOR THE INFORMATION IT CONTAINS MAY BE USED BY OR DISCLOSED TO ANY THIRD PARTY WITHOUT PRIOR WRITTEN CONSENT OF COMPAL ELECTRONICS, INC.

Compal Electronics, Inc.

Title: SCHEMATIC, M/B LA-2781

Size: B | Document Number: 401353 | Rev: B

Date: 星期日, 一月 01, 2006 | Sheet 14 of 50

LCD POWER CIRCUIT

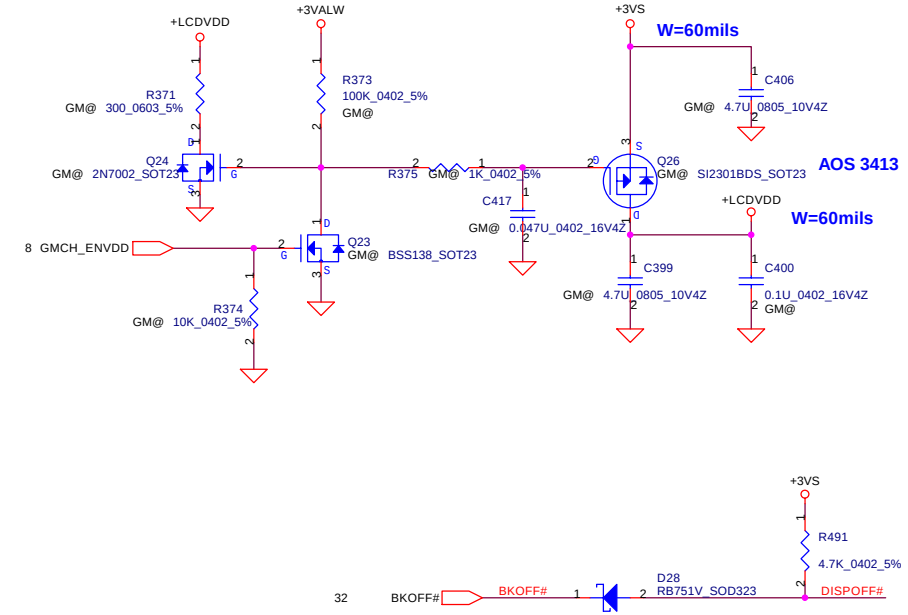

LCD Conn.

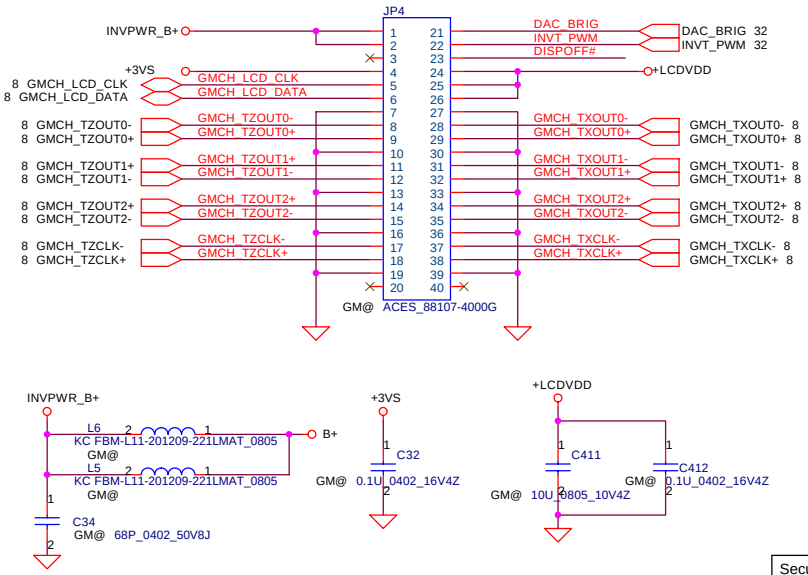

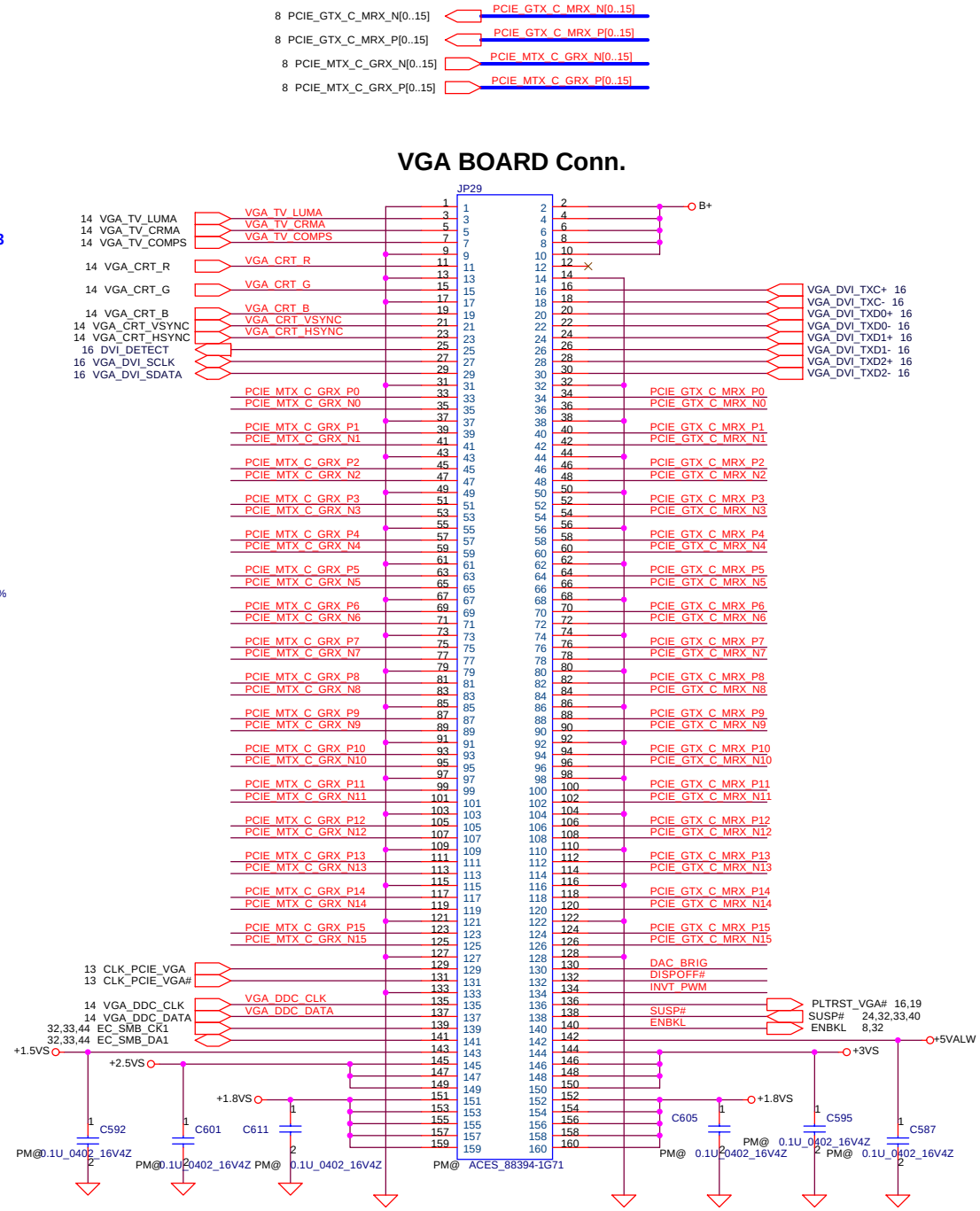

Security Classification	Compal Secret Data		
Issued Date	2005/07/29	Deciphered Date	2006/07/29

THIS SHEET OF ENGINEERING DRAWING IS THE PROPRIETARY PROPERTY OF COMPAL ELECTRONICS, INC. AND CONTAINS CONFIDENTIAL AND TRADE SECRET INFORMATION. THIS SHEET MAY NOT BE TRANSFERED FROM THE CUSTODY OF THE COMPETENT DIVISION OF R&D DEPARTMENT EXCEPT AS AUTHORIZED BY COMPAL ELECTRONICS, INC. NEITHER THIS SHEET NOR THE INFORMATION IT CONTAINS MAY BE USED BY OR DISCLOSED TO ANY THIRD PARTY WITHOUT PRIOR WRITTEN CONSENT OF COMPAL ELECTRONICS, INC.

Compal Electronics, Inc.

Title: SCHEMATIC, M/B LA-2781

Size: B | Document Number: 401353 | Rev: B

Date: 星期日, 一月 01, 2006 | Sheet 15 of 50

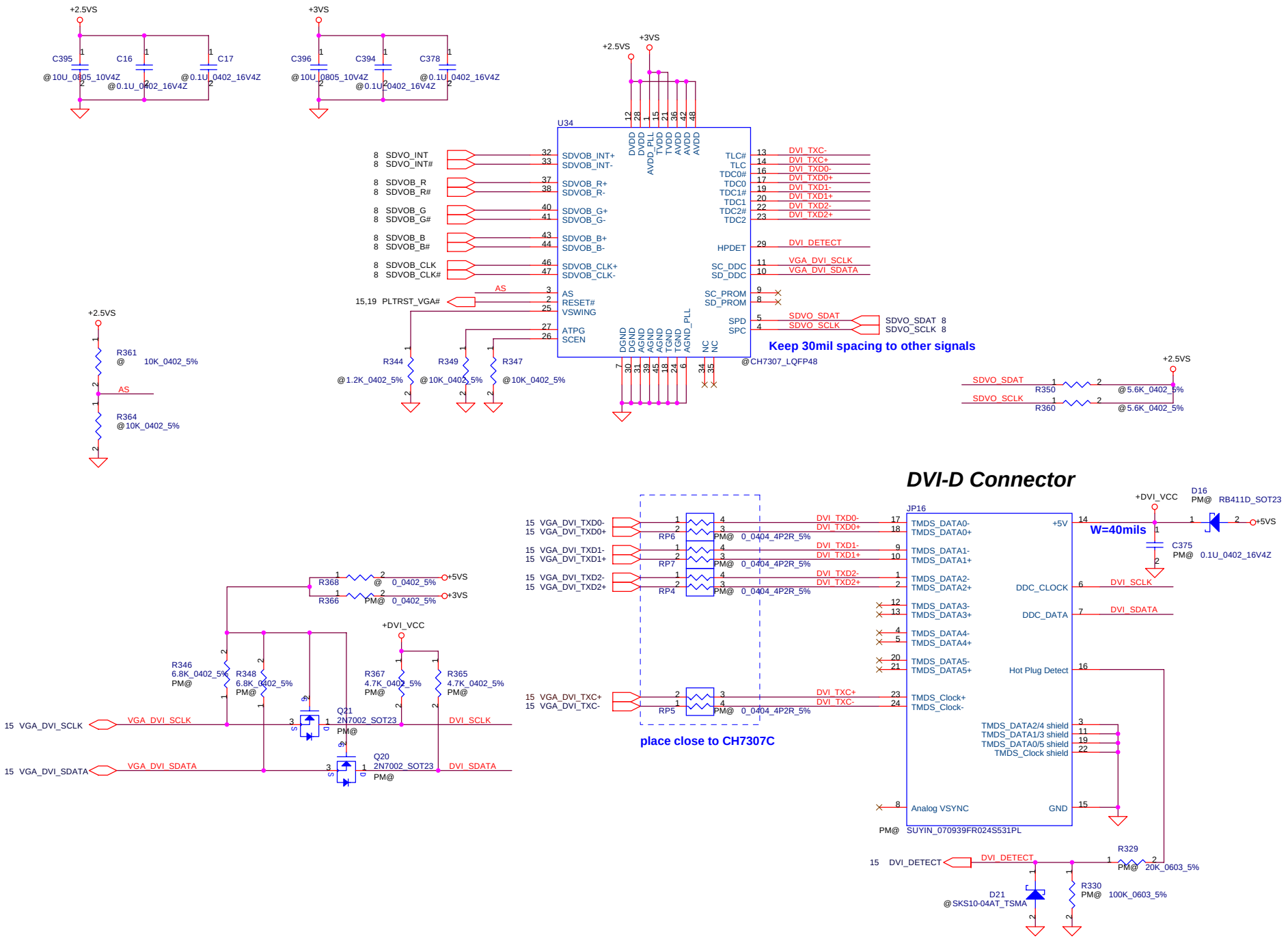

Security Classification	Compal Secret Data		
Issued Date	2005/07/29	Deciphered Date	2006/07/29

THIS SHEET OF ENGINEERING DRAWING IS THE PROPRIETARY PROPERTY OF COMPAL ELECTRONICS, INC. AND CONTAINS CONFIDENTIAL AND TRADE SECRET INFORMATION. THIS SHEET MAY NOT BE TRANSFERED FROM THE CUSTODY OF THE COMPETENT DIVISION OF R&D DEPARTMENT EXCEPT AS AUTHORIZED BY COMPAL ELECTRONICS, INC. NEITHER THIS SHEET NOR THE INFORMATION IT CONTAINS MAY BE USED BY OR DISCLOSED TO ANY THIRD PARTY WITHOUT PRIOR WRITTEN CONSENT OF COMPAL ELECTRONICS, INC.

Compal Electronics, Inc.

Title: SCHEMATIC, M/B LA-2781

Size: B | Document Number: 401353 | Rev: B

Date: 星期日, 一月 01, 2006 | Sheet 16 of 50

Security Classification	Compal Secret Data		
Issued Date	2005/07/29	Deciphered Date	2006/07/29

THIS SHEET OF ENGINEERING DRAWING IS THE PROPRIETARY PROPERTY OF COMPAL ELECTRONICS, INC. AND CONTAINS CONFIDENTIAL AND TRADE SECRET INFORMATION. THIS SHEET MAY NOT BE TRANSFERED FROM THE CUSTODY OF THE COMPETENT DIVISION OF R&D DEPARTMENT EXCEPT AS AUTHORIZED BY COMPAL ELECTRONICS, INC. NEITHER THIS SHEET NOR THE INFORMATION IT CONTAINS MAY BE USED BY OR DISCLOSED TO ANY THIRD PARTY WITHOUT PRIOR WRITTEN CONSENT OF COMPAL ELECTRONICS, INC.

Compal Electronics, Inc.

Title: SCHEMATIC, M/B LA-2781

Size: B | Document Number: 401353 | Rev: B

Date: 星期日, 一月 01, 2006 | Sheet 17 of 50

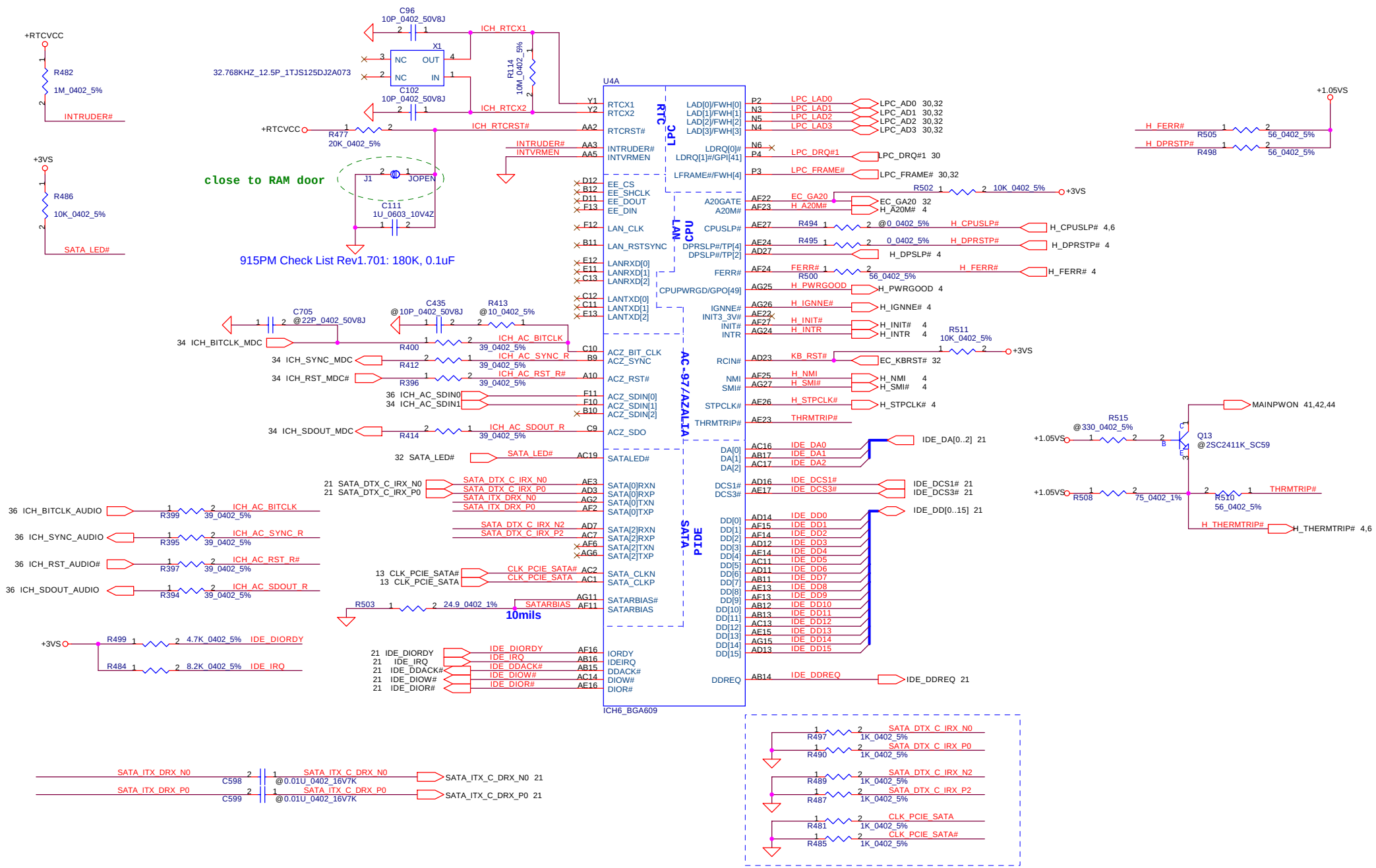

Security Classification	Compal Secret Data		
Issued Date	2005/07/29	Deciphered Date	2006/07/29

THIS SHEET OF ENGINEERING DRAWING IS THE PROPRIETARY PROPERTY OF COMPAL ELECTRONICS, INC. AND CONTAINS CONFIDENTIAL AND TRADE SECRET INFORMATION. THIS SHEET MAY NOT BE TRANSFERED FROM THE CUSTODY OF THE COMPETENT DIVISION OF R&D DEPARTMENT EXCEPT AS AUTHORIZED BY COMPAL ELECTRONICS, INC. NEITHER THIS SHEET NOR THE INFORMATION IT CONTAINS MAY BE USED BY OR DISCLOSED TO ANY THIRD PARTY WITHOUT PRIOR WRITTEN CONSENT OF COMPAL ELECTRONICS, INC.

Compal Electronics, Inc.

Title: SCHEMATIC, M/B LA-2781

Size: B | Document Number: 401353 | Rev: B

Date: 星期日, 一月 01, 2006 | Sheet 18 of 50

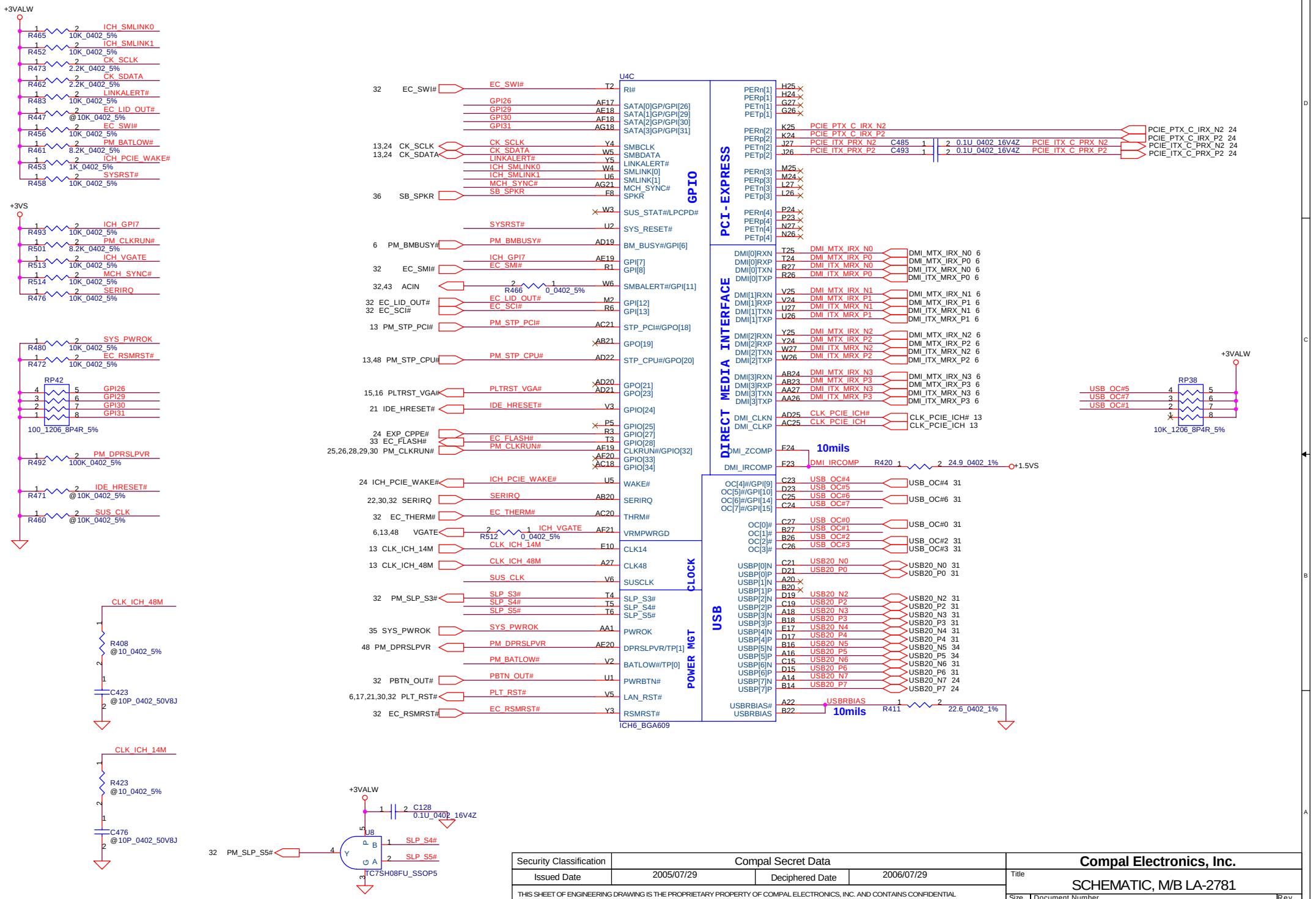

Security Classification	Compal Secret Data		
Issued Date	2005/07/29	Deciphered Date	2006/07/29

THIS SHEET OF ENGINEERING DRAWING IS THE PROPRIETARY PROPERTY OF COMPAL ELECTRONICS, INC. AND CONTAINS CONFIDENTIAL AND TRADE SECRET INFORMATION. THIS SHEET MAY NOT BE TRANSFERED FROM THE CUSTODY OF THE COMPETENT DIVISION OF R&D DEPARTMENT EXCEPT AS AUTHORIZED BY COMPAL ELECTRONICS, INC. NEITHER THIS SHEET NOR THE INFORMATION IT CONTAINS MAY BE USED BY OR DISCLOSED TO ANY THIRD PARTY WITHOUT PRIOR WRITTEN CONSENT OF COMPAL ELECTRONICS, INC.

Compal Electronics, Inc.

Title: SCHEMATIC, M/B LA-2781

Size: B | Document Number: 401353 | Rev: B

Date: 星期日, 一月 01, 2006 | Sheet 19 of 50

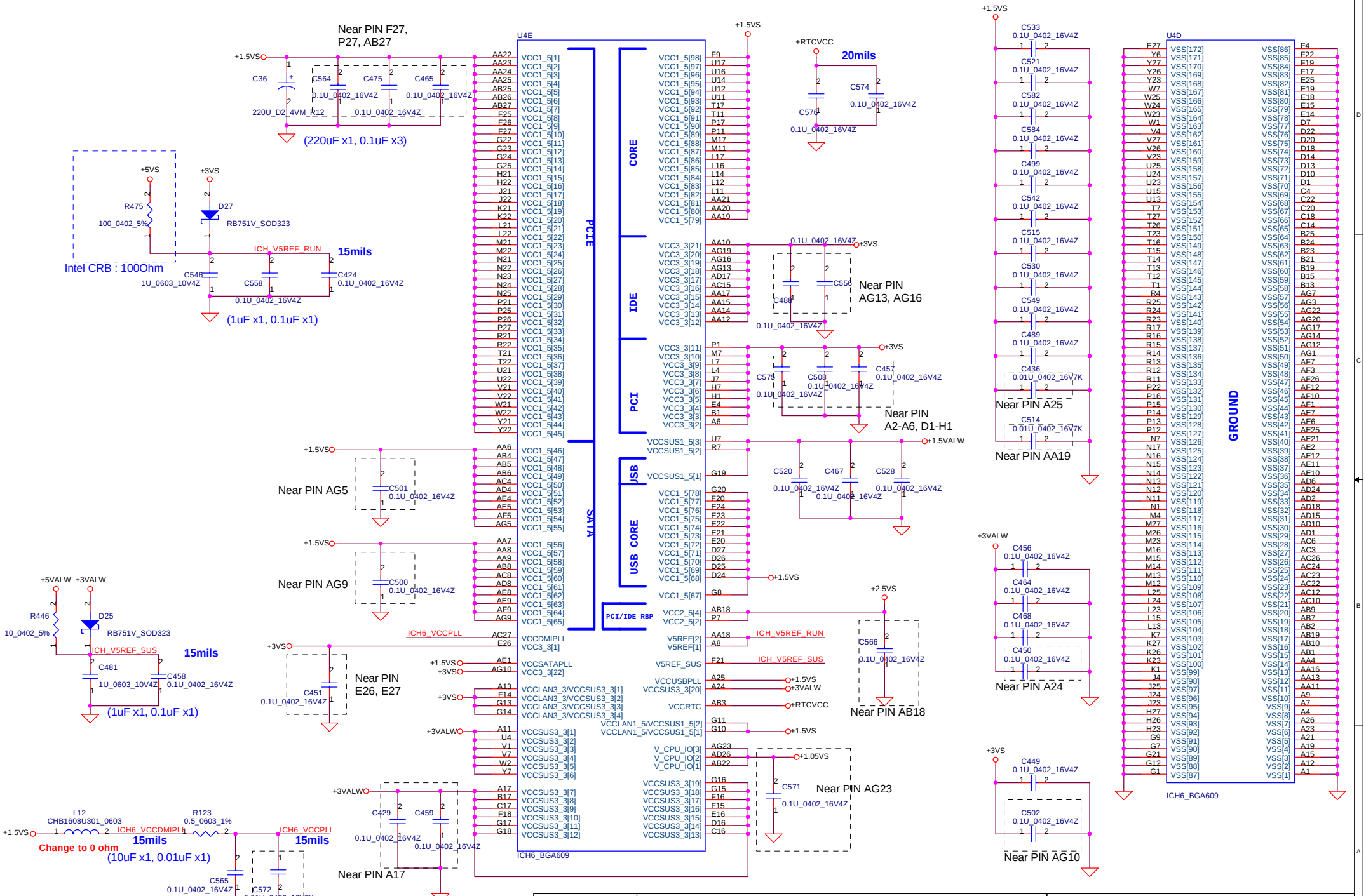

Security Classification	Compal Secret Data		
Issued Date	2005/07/29	Deciphered Date	2006/07/29

THIS SHEET OF ENGINEERING DRAWING IS THE PROPRIETARY PROPERTY OF COMPAL ELECTRONICS, INC. AND CONTAINS CONFIDENTIAL AND TRADE SECRET INFORMATION. THIS SHEET MAY NOT BE TRANSFERED FROM THE CUSTODY OF THE COMPETENT DIVISION OF R&D DEPARTMENT EXCEPT AS AUTHORIZED BY COMPAL ELECTRONICS, INC. NEITHER THIS SHEET NOR THE INFORMATION IT CONTAINS MAY BE USED BY OR DISCLOSED TO ANY THIRD PARTY WITHOUT PRIOR WRITTEN CONSENT OF COMPAL ELECTRONICS, INC.

Compal Electronics, Inc.

Title: SCHEMATIC, M/B LA-2781

Size: B | Document Number: 401353 | Rev: B

Date: 星期日, 一月 01, 2006 | Sheet 20 of 50

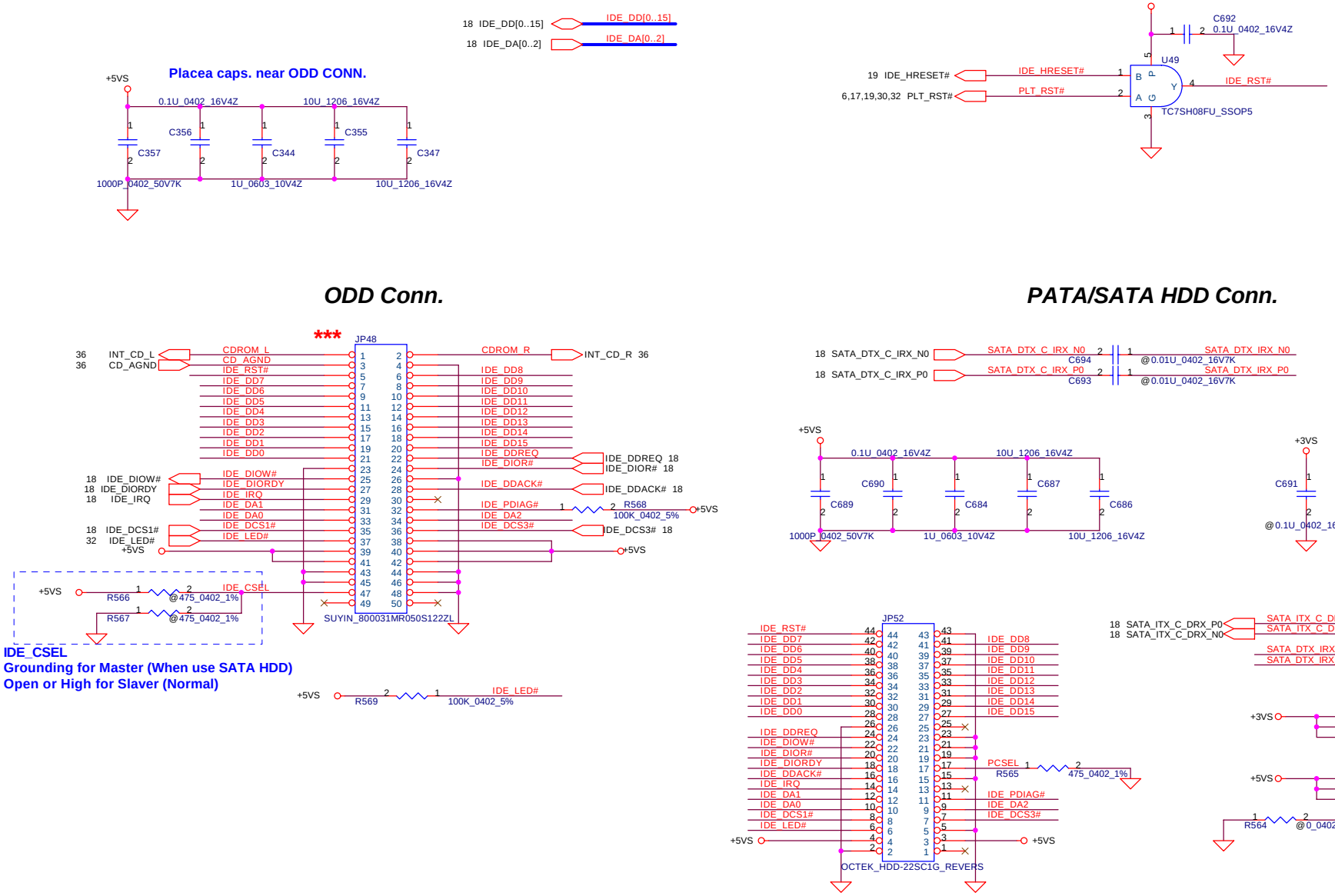

Security Classification	Compal Secret Data		
Issued Date	2005/07/29	Deciphered Date	2006/07/29

THIS SHEET OF ENGINEERING DRAWING IS THE PROPRIETARY PROPERTY OF COMPAL ELECTRONICS, INC. AND CONTAINS CONFIDENTIAL AND TRADE SECRET INFORMATION. THIS SHEET MAY NOT BE TRANSFERED FROM THE CUSTODY OF THE COMPETENT DIVISION OF R&D DEPARTMENT EXCEPT AS AUTHORIZED BY COMPAL ELECTRONICS, INC. NEITHER THIS SHEET NOR THE INFORMATION IT CONTAINS MAY BE USED BY OR DISCLOSED TO ANY THIRD PARTY WITHOUT PRIOR WRITTEN CONSENT OF COMPAL ELECTRONICS, INC.

Compal Electronics, Inc.

Title: SCHEMATIC, M/B LA-2781

Size: B | Document Number: 401353 | Rev: B

Date: 星期日, 一月 01, 2006 | Sheet 21 of 50

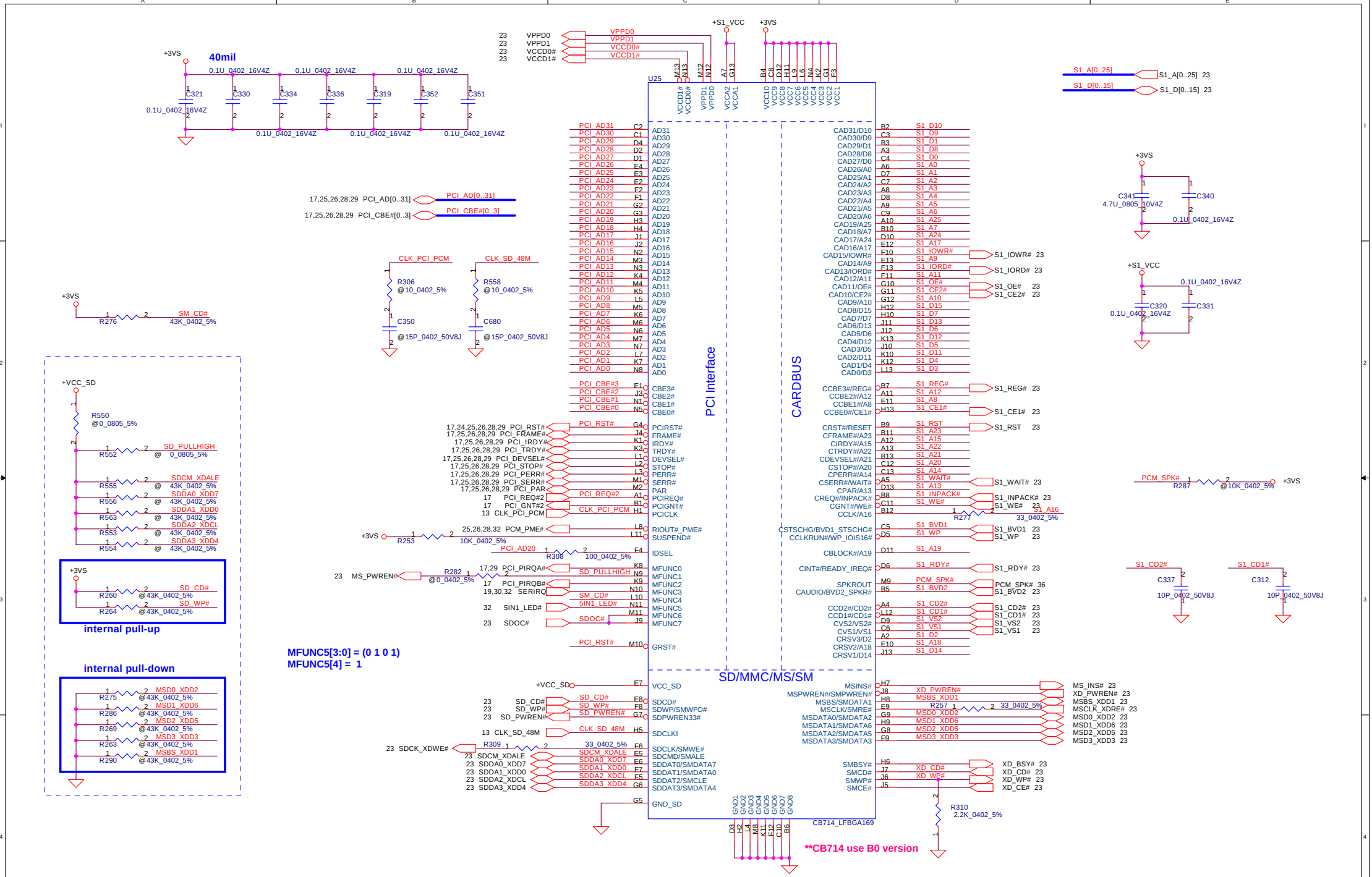

Security Classification	Compal Secret Data		
Issued Date	2005/07/29	Deciphered Date	2006/07/29

THIS SHEET OF ENGINEERING DRAWING IS THE PROPRIETARY PROPERTY OF COMPAL ELECTRONICS, INC. AND CONTAINS CONFIDENTIAL AND TRADE SECRET INFORMATION. THIS SHEET MAY NOT BE TRANSFERED FROM THE CUSTODY OF THE COMPETENT DIVISION OF R&D DEPARTMENT EXCEPT AS AUTHORIZED BY COMPAL ELECTRONICS, INC. NEITHER THIS SHEET NOR THE INFORMATION IT CONTAINS MAY BE USED BY OR DISCLOSED TO ANY THIRD PARTY WITHOUT PRIOR WRITTEN CONSENT OF COMPAL ELECTRONICS, INC.

Compal Electronics, Inc.

Title: SCHEMATIC, M/B LA-2781

Size: Custom | Document Number: 401353 | Rev: B

Date: 星期日, 一月 01, 2006 | Sheet 22 of 50

PCMCIA Power Control

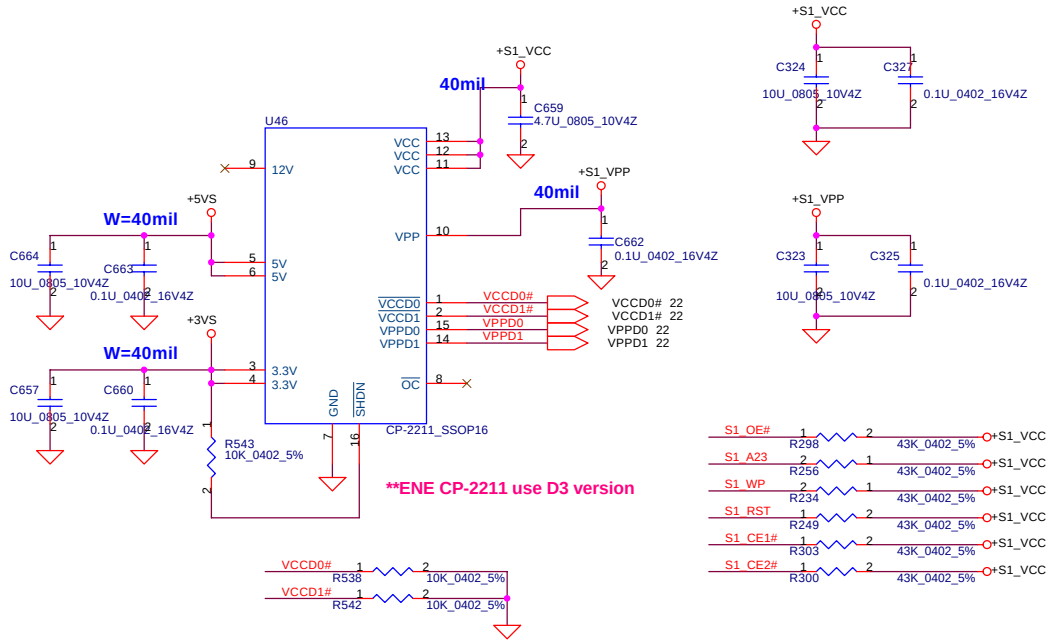

PCMCIA Socket

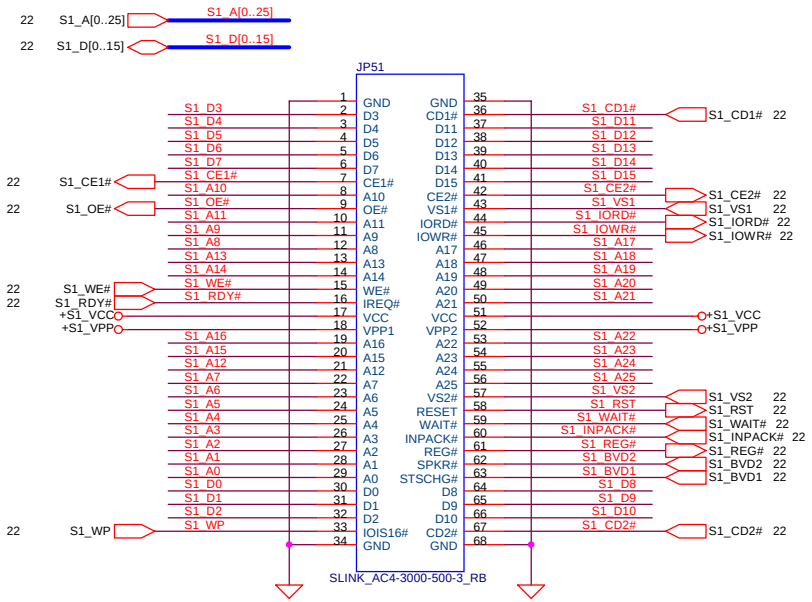

XD Power Control

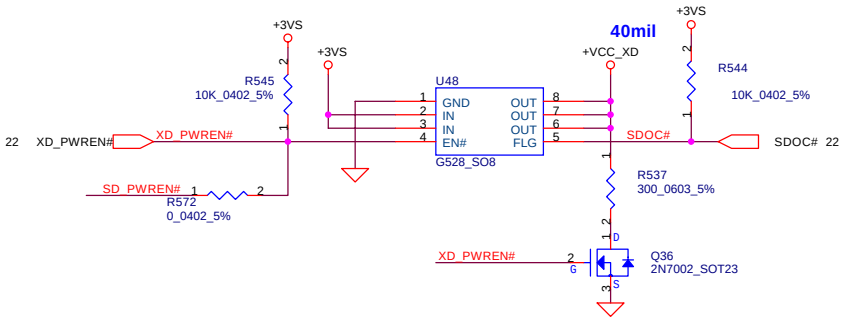

xD PU and PD. Close to Socket

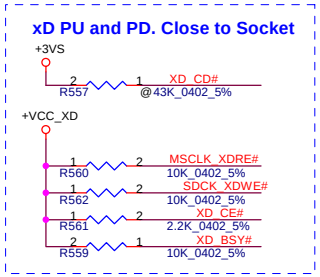

SD/MS Power Control

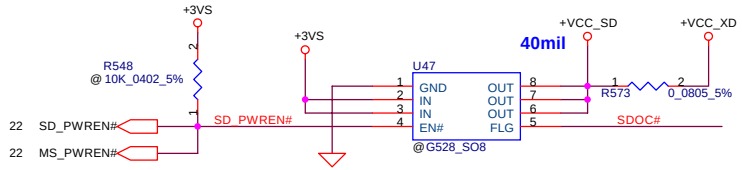

Reserve for SD,MS CLK. Close to Socket

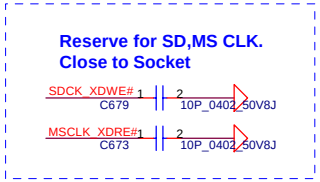

4 IN 1 Socket

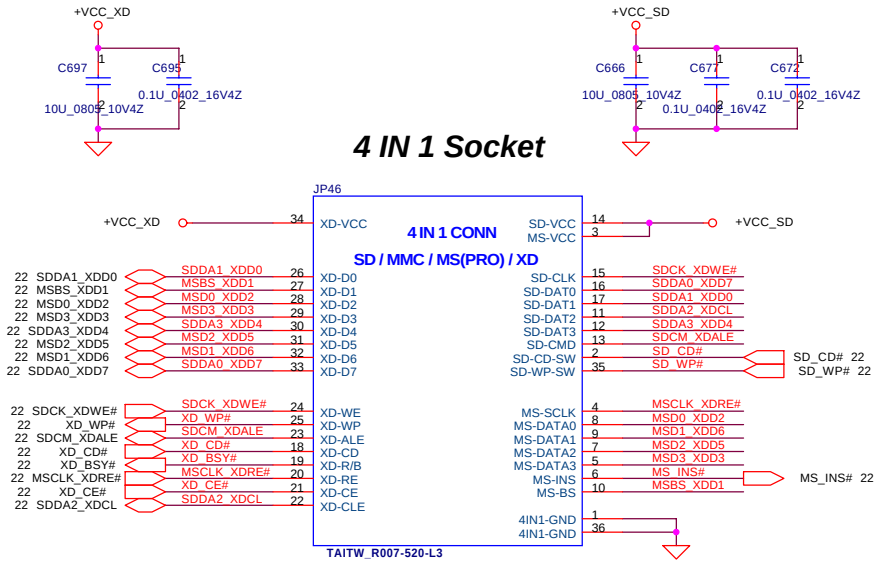

Security Classification	Compal Secret Data		
Issued Date	2005/07/29	Deciphered Date	2006/07/29

THIS SHEET OF ENGINEERING DRAWING IS THE PROPRIETARY PROPERTY OF COMPAL ELECTRONICS, INC. AND CONTAINS CONFIDENTIAL AND TRADE SECRET INFORMATION. THIS SHEET MAY NOT BE TRANSFERED FROM THE CUSTODY OF THE COMPETENT DIVISION OF R&D DEPARTMENT EXCEPT AS AUTHORIZED BY COMPAL ELECTRONICS, INC. NEITHER THIS SHEET NOR THE INFORMATION IT CONTAINS MAY BE USED BY OR DISCLOSED TO ANY THIRD PARTY WITHOUT PRIOR WRITTEN CONSENT OF COMPAL ELECTRONICS, INC.

Compal Electronics, Inc.

Title: SCHEMATIC, M/B LA-2781

Size: B | Document Number: 401353 | Rev: B

Date: 星期日, 一月 01, 2006 | Sheet 23 of 50

New Card Power Switch

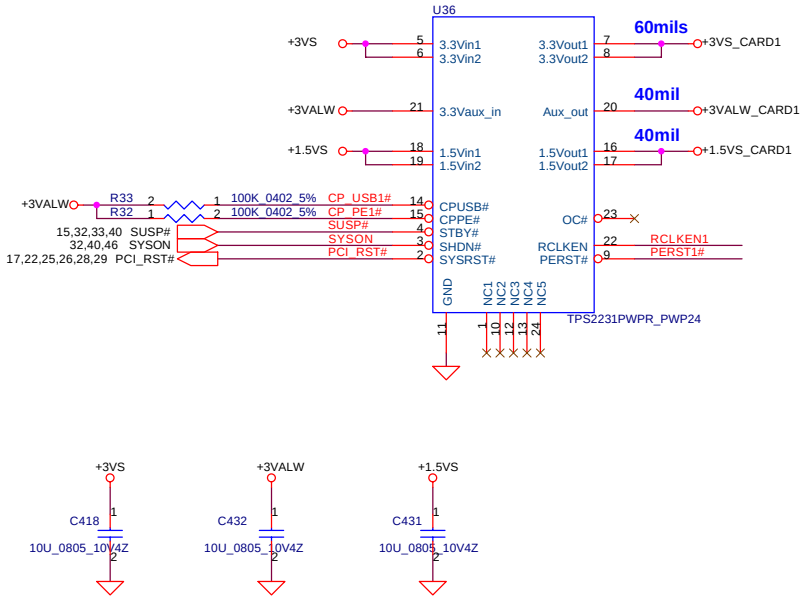

New Card Socket (Left)

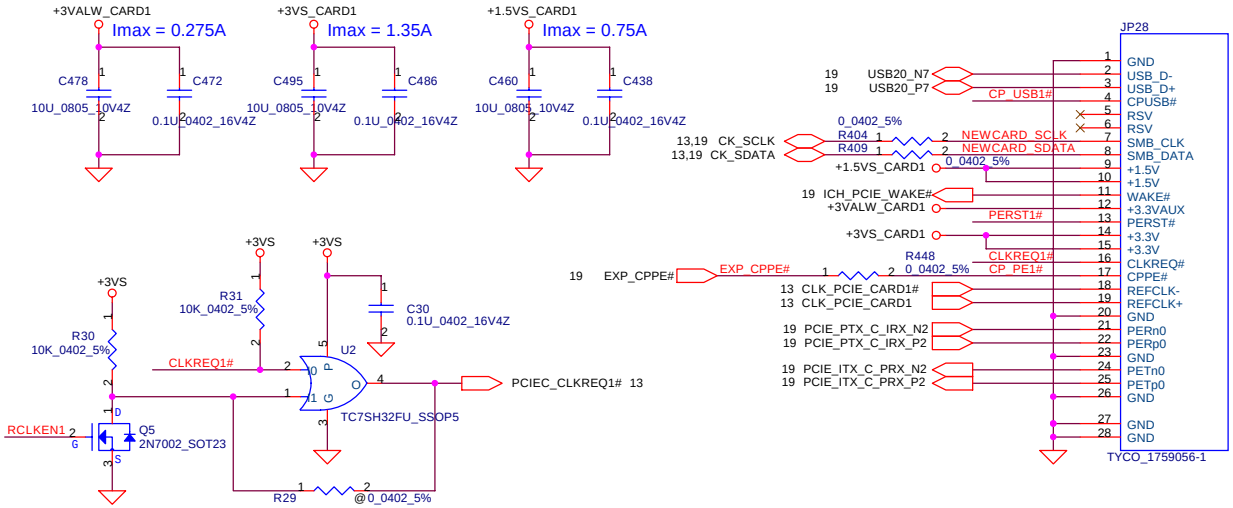

Security Classification	Compal Secret Data		
Issued Date	2005/07/29	Deciphered Date	2006/07/29

THIS SHEET OF ENGINEERING DRAWING IS THE PROPRIETARY PROPERTY OF COMPAL ELECTRONICS, INC. AND CONTAINS CONFIDENTIAL AND TRADE SECRET INFORMATION. THIS SHEET MAY NOT BE TRANSFERED FROM THE CUSTODY OF THE COMPETENT DIVISION OF R&D DEPARTMENT EXCEPT AS AUTHORIZED BY COMPAL ELECTRONICS, INC. NEITHER THIS SHEET NOR THE INFORMATION IT CONTAINS MAY BE USED BY OR DISCLOSED TO ANY THIRD PARTY WITHOUT PRIOR WRITTEN CONSENT OF COMPAL ELECTRONICS, INC.

Compal Electronics, Inc.

Title: SCHEMATIC, M/B LA-2781

Size: B | Document Number: 401353 | Rev: B

Date: 星期日, 一月 01, 2006 | Sheet 24 of 50

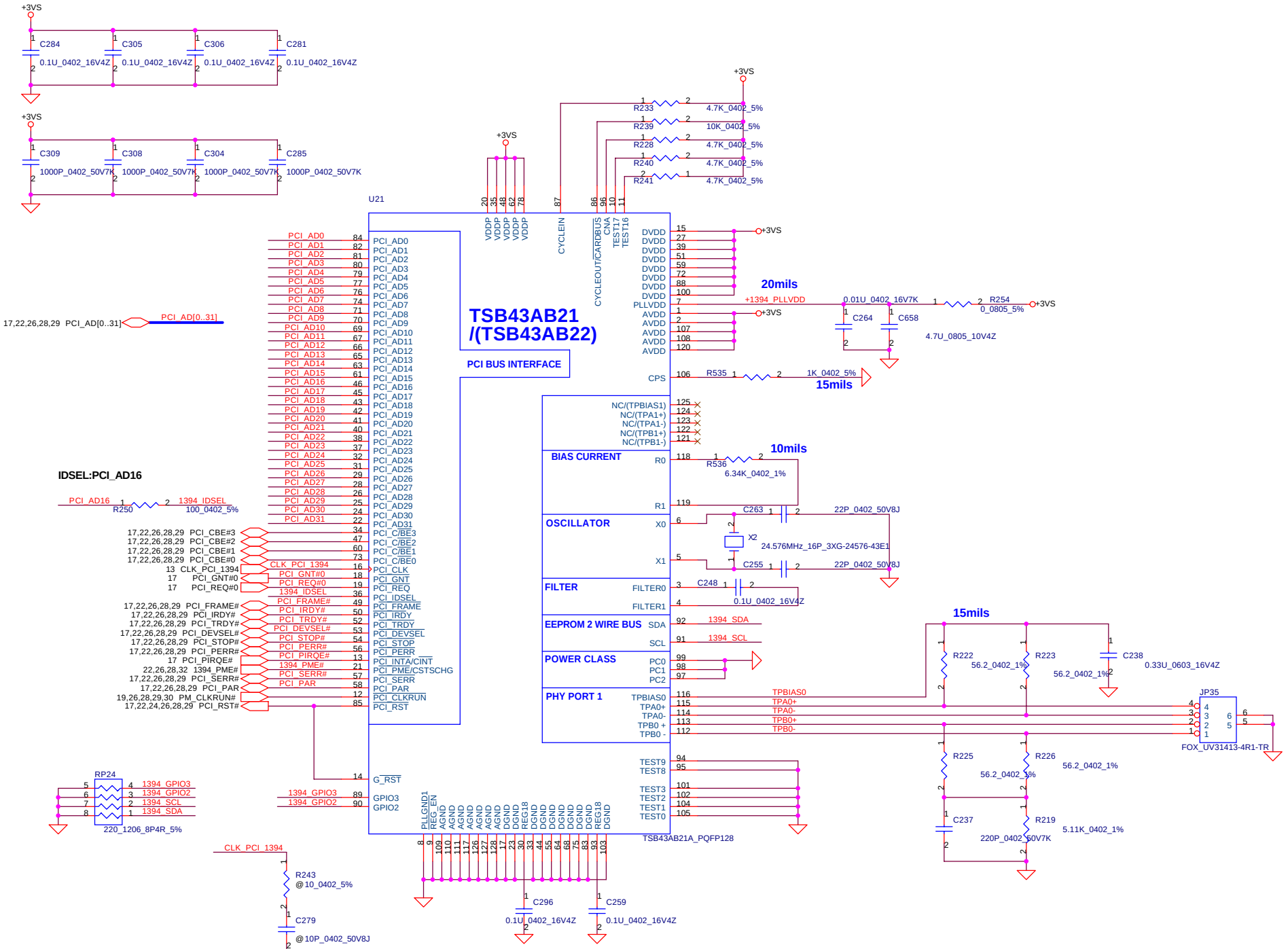

Security Classification	Compal Secret Data		
Issued Date	2005/07/29	Deciphered Date	2006/07/29

THIS SHEET OF ENGINEERING DRAWING IS THE PROPRIETARY PROPERTY OF COMPAL ELECTRONICS, INC. AND CONTAINS CONFIDENTIAL AND TRADE SECRET INFORMATION. THIS SHEET MAY NOT BE TRANSFERED FROM THE CUSTODY OF THE COMPETENT DIVISION OF R&D DEPARTMENT EXCEPT AS AUTHORIZED BY COMPAL ELECTRONICS, INC. NEITHER THIS SHEET NOR THE INFORMATION IT CONTAINS MAY BE USED BY OR DISCLOSED TO ANY THIRD PARTY WITHOUT PRIOR WRITTEN CONSENT OF COMPAL ELECTRONICS, INC.

Compal Electronics, Inc.

Title: SCHEMATIC, M/B LA-2781

Size: B | Document Number: 401353 | Rev: B

Date: 星期日, 一月 01, 2006 | Sheet 25 of 50

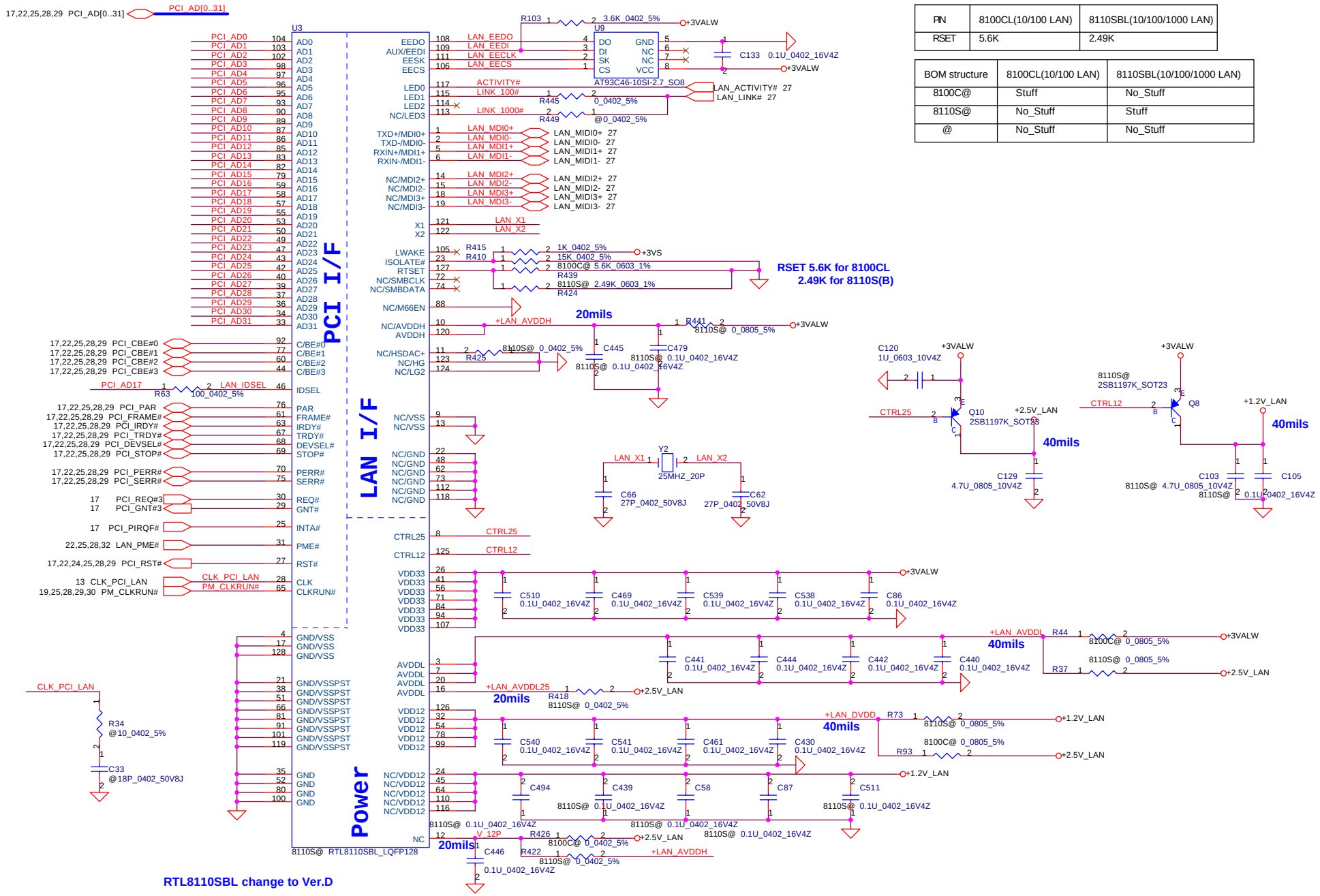

PIN	8100CL(10/100 LAN)	8110SBL(10/100/1000 LAN)
RSET	5.6K	2.49K

BOM structure	8100CL(10/100 LAN)	8110SBL(10/100/1000 LAN)
8100C@	Stuff	No_Stuff
8110S@	No_Stuff	Stuff
@	No_Stuff	No_Stuff

Security Classification	Compal Secret Data		
Issued Date	2005/07/29	Deciphered Date	2006/07/29

THIS SHEET OF ENGINEERING DRAWING IS THE PROPRIETARY PROPERTY OF COMPAL ELECTRONICS, INC. AND CONTAINS CONFIDENTIAL AND TRADE SECRET INFORMATION. THIS SHEET MAY NOT BE TRANSFERED FROM THE CUSTODY OF THE COMPETENT DIVISION OF R&D DEPARTMENT EXCEPT AS AUTHORIZED BY COMPAL ELECTRONICS, INC. NEITHER THIS SHEET NOR THE INFORMATION IT CONTAINS MAY BE USED BY OR DISCLOSED TO ANY THIRD PARTY WITHOUT PRIOR WRITTEN CONSENT OF COMPAL ELECTRONICS, INC.

Compal Electronics, Inc.

Title: SCHEMATIC, M/B LA-2781

Size: B | Document Number: 401353 | Rev: B

Date: 星期日, 一月 01, 2006 | Sheet 26 of 50

LAN RTL8110SBL/RTL8100CL

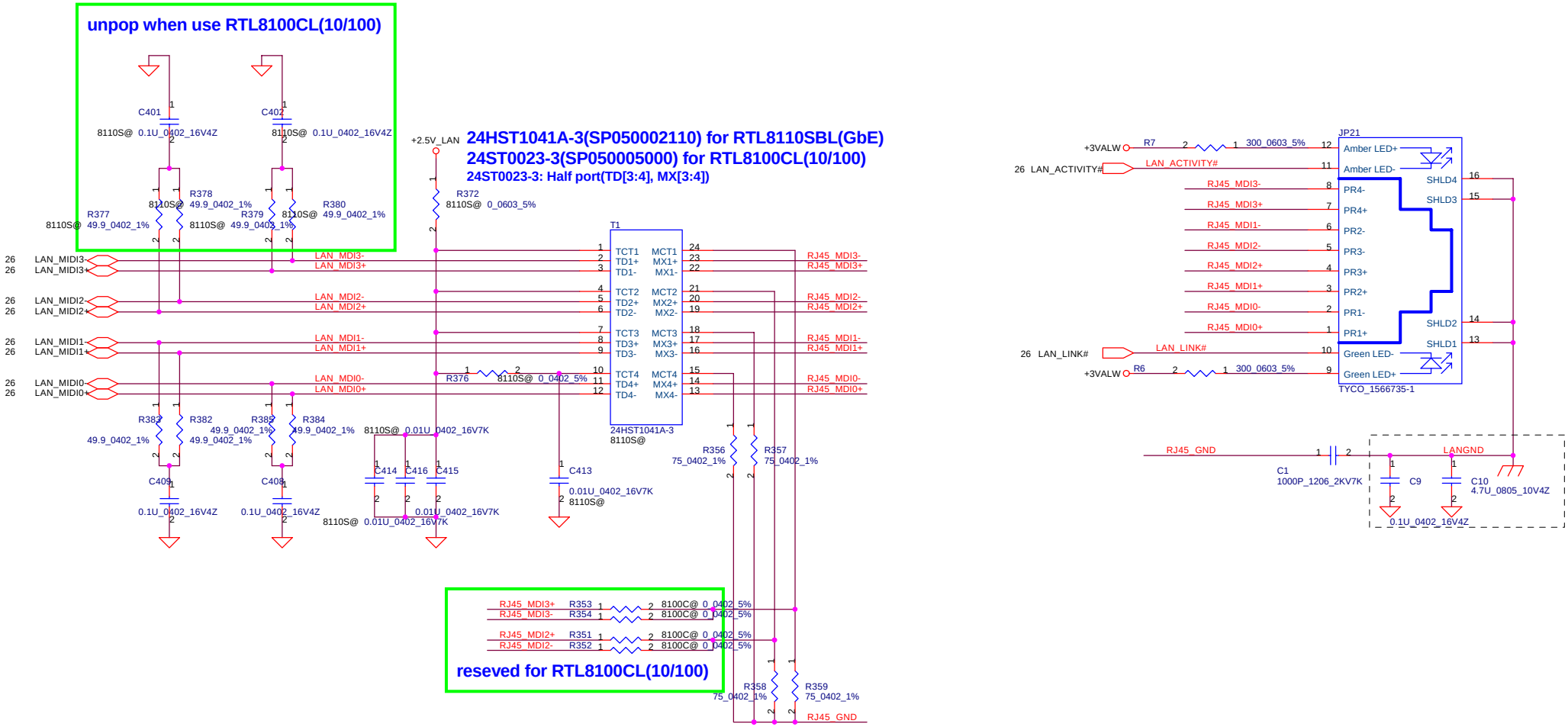

Security Classification	Compal Secret Data		
Issued Date	2005/07/29	Deciphered Date	2006/07/29

THIS SHEET OF ENGINEERING DRAWING IS THE PROPRIETARY PROPERTY OF COMPAL ELECTRONICS, INC. AND CONTAINS CONFIDENTIAL AND TRADE SECRET INFORMATION. THIS SHEET MAY NOT BE TRANSFERED FROM THE CUSTODY OF THE COMPETENT DIVISION OF R&D DEPARTMENT EXCEPT AS AUTHORIZED BY COMPAL ELECTRONICS, INC. NEITHER THIS SHEET NOR THE INFORMATION IT CONTAINS MAY BE USED BY OR DISCLOSED TO ANY THIRD PARTY WITHOUT PRIOR WRITTEN CONSENT OF COMPAL ELECTRONICS, INC.

Compal Electronics, Inc.

Title: SCHEMATIC, M/B LA-2781

Size: B | Document Number: 401353 | Rev: B

Date: 星期日, 一月 01, 2006 | Sheet 27 of 50

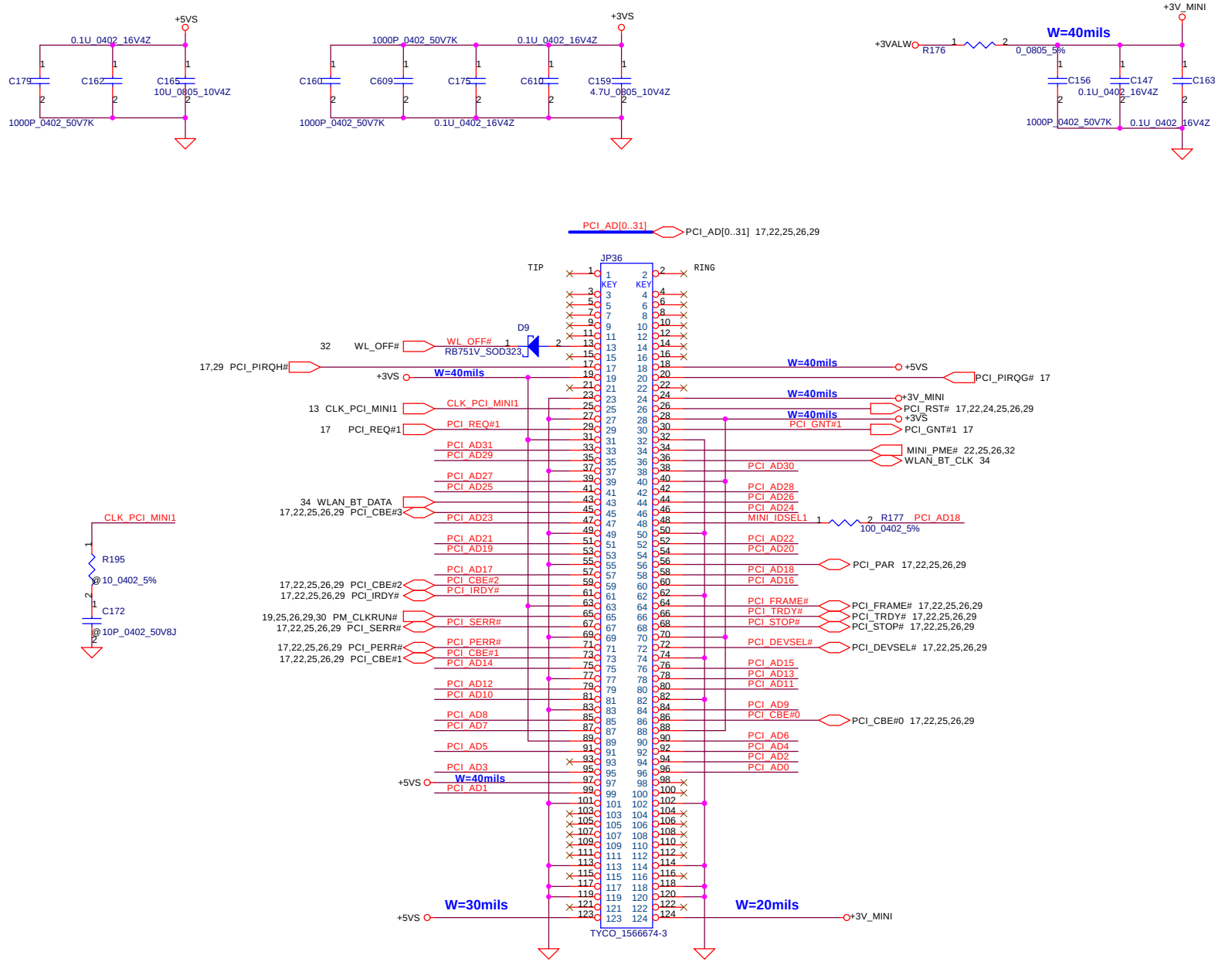

(Change to SP070003200)

(change to H=4.0mm)

Security Classification	Compal Secret Data		
Issued Date	2005/07/29	Deciphered Date	2006/07/29

THIS SHEET OF ENGINEERING DRAWING IS THE PROPRIETARY PROPERTY OF COMPAL ELECTRONICS, INC. AND CONTAINS CONFIDENTIAL AND TRADE SECRET INFORMATION. THIS SHEET MAY NOT BE TRANSFERED FROM THE CUSTODY OF THE COMPETENT DIVISION OF R&D DEPARTMENT EXCEPT AS AUTHORIZED BY COMPAL ELECTRONICS, INC. NEITHER THIS SHEET NOR THE INFORMATION IT CONTAINS MAY BE USED BY OR DISCLOSED TO ANY THIRD PARTY WITHOUT PRIOR WRITTEN CONSENT OF COMPAL ELECTRONICS, INC.

Compal Electronics, Inc.

Title: SCHEMATIC, M/B LA-2781

Size: B | Document Number: 401353 | Rev: B

Date: 星期日, 一月 01, 2006 | Sheet 28 of 50

TV-Tuner

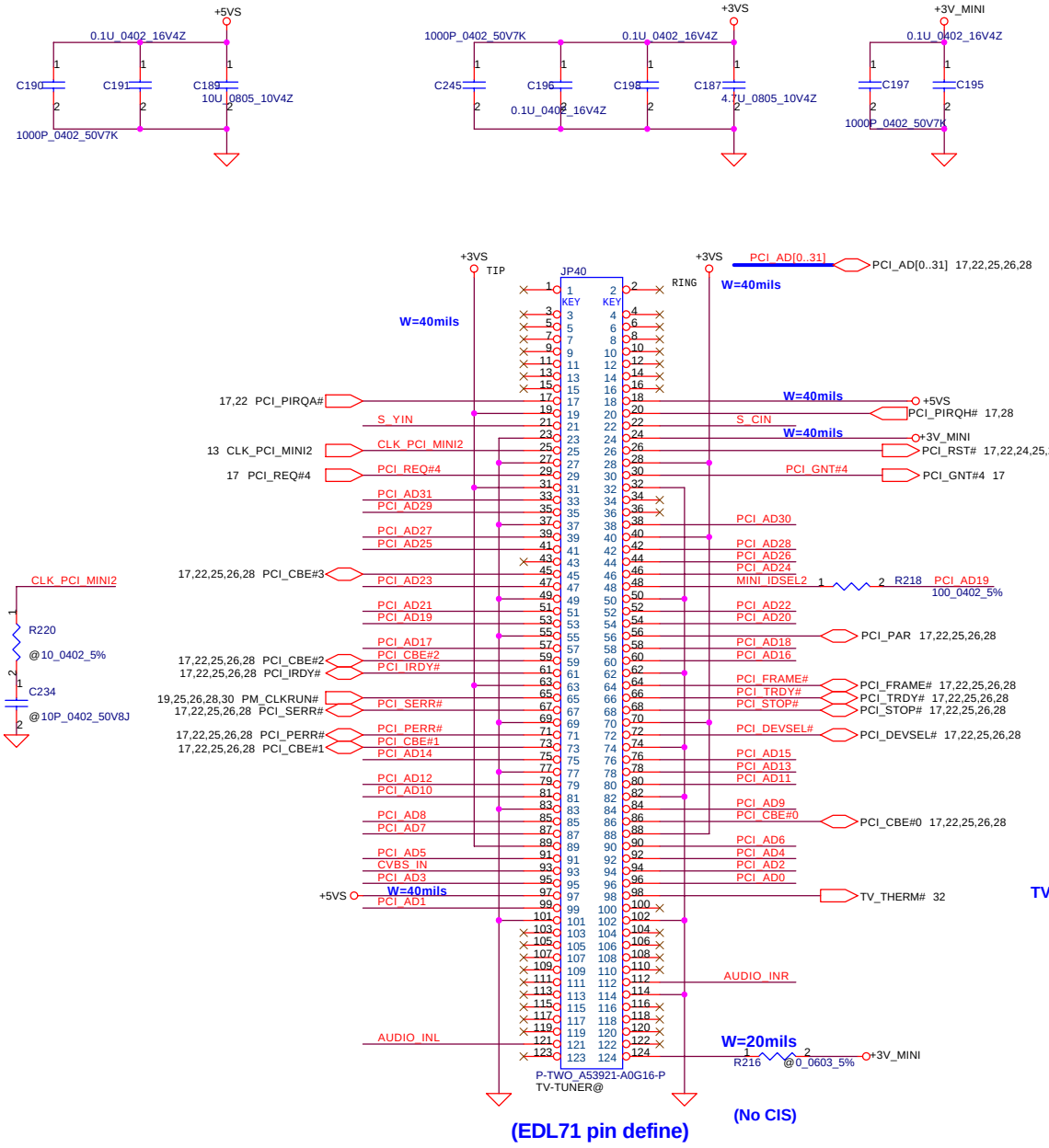

(EDL71 pin define)

(No CIS)

(For TV-Tuner change to H=9.2mm)

AV In

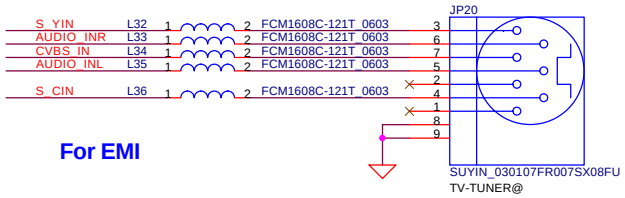

For EMI

Acer TV-Tuner Design Guide Rev1.1
1. N/A
2. N/A
3. S-Video - Y
4. S-Video - C
5. Audio - Left
6. Audio - Right
7. CVBS

RF In

connected directly without Via

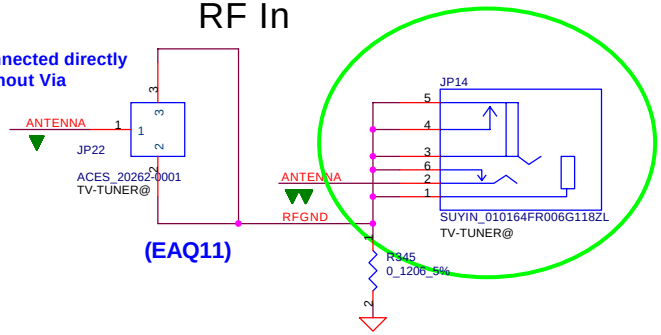

(EAQ11)

TV_THERM#: Normal High(+3VS), Active Low

Security Classification	Compal Secret Data		
Issued Date	2005/07/29	Deciphered Date	2006/07/29

THIS SHEET OF ENGINEERING DRAWING IS THE PROPRIETARY PROPERTY OF COMPAL ELECTRONICS, INC. AND CONTAINS CONFIDENTIAL AND TRADE SECRET INFORMATION. THIS SHEET MAY NOT BE TRANSFERED FROM THE CUSTODY OF THE COMPETENT DIVISION OF R&D DEPARTMENT EXCEPT AS AUTHORIZED BY COMPAL ELECTRONICS, INC. NEITHER THIS SHEET NOR THE INFORMATION IT CONTAINS MAY BE USED BY OR DISCLOSED TO ANY THIRD PARTY WITHOUT PRIOR WRITTEN CONSENT OF COMPAL ELECTRONICS, INC.

Compal Electronics, Inc.

Title: SCHEMATIC, M/B LA-2781

Size: B | Document Number: 401353 | Rev: B

Date: 星期日, 一月 01, 2006 | Sheet 29 of 50

SUPER I/O SMsC LPC47N217

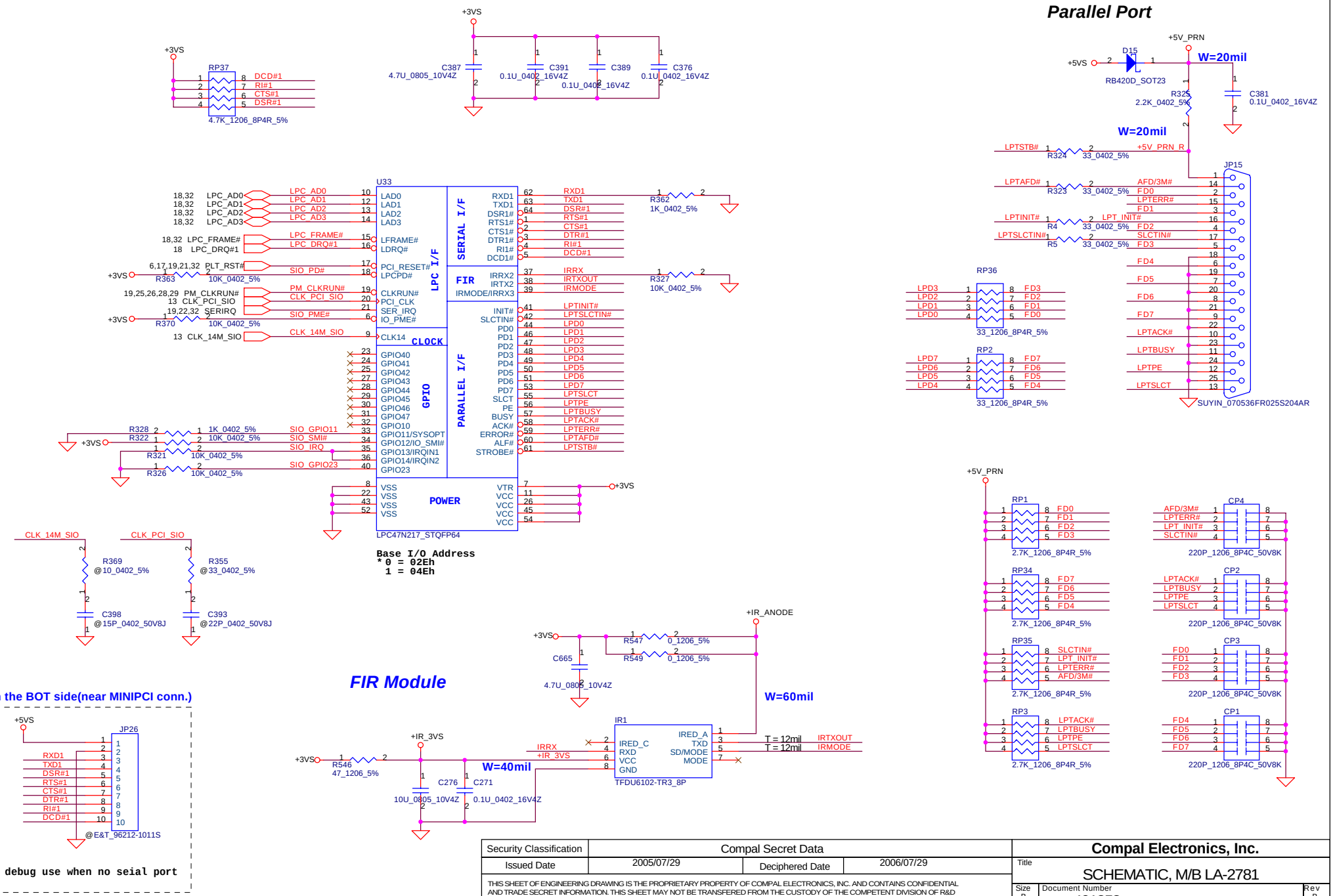

Security Classification	Compal Secret Data		
Issued Date	2005/07/29	Deciphered Date	2006/07/29

THIS SHEET OF ENGINEERING DRAWING IS THE PROPRIETARY PROPERTY OF COMPAL ELECTRONICS, INC. AND CONTAINS CONFIDENTIAL AND TRADE SECRET INFORMATION. THIS SHEET MAY NOT BE TRANSFERED FROM THE CUSTODY OF THE COMPETENT DIVISION OF R&D DEPARTMENT EXCEPT AS AUTHORIZED BY COMPAL ELECTRONICS, INC. NEITHER THIS SHEET NOR THE INFORMATION IT CONTAINS MAY BE USED BY OR DISCLOSED TO ANY THIRD PARTY WITHOUT PRIOR WRITTEN CONSENT OF COMPAL ELECTRONICS, INC.

Compal Electronics, Inc.

Title: SCHEMATIC, M/B LA-2781

Size: B | Document Number: 401353 | Rev: B

Date: 星期日, 一月 01, 2006 | Sheet 30 of 50

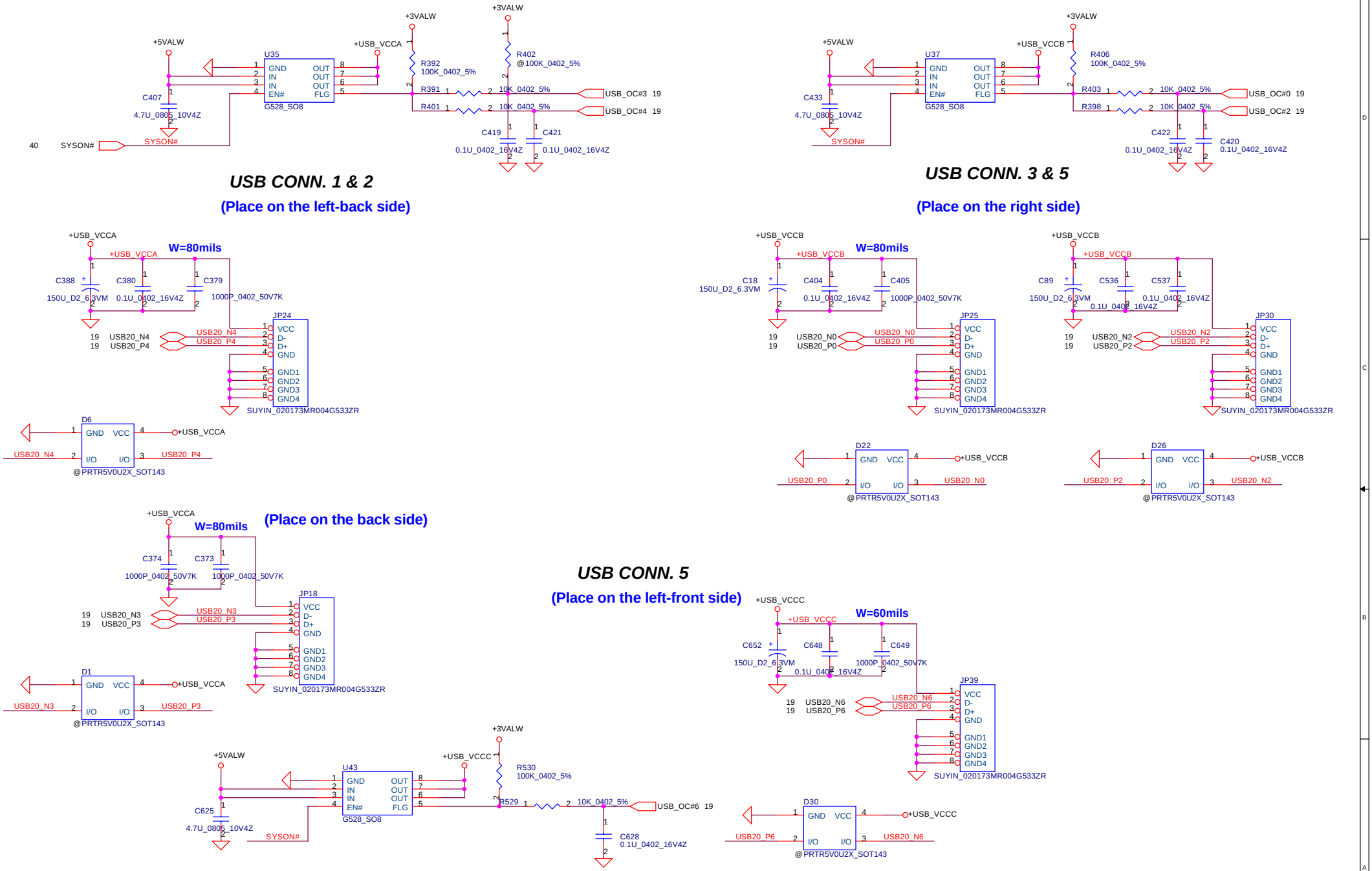

Security Classification	Compal Secret Data		
Issued Date	2005/07/29	Deciphered Date	2006/07/29

THIS SHEET OF ENGINEERING DRAWING IS THE PROPRIETARY PROPERTY OF COMPAL ELECTRONICS, INC. AND CONTAINS CONFIDENTIAL AND TRADE SECRET INFORMATION. THIS SHEET MAY NOT BE TRANSFERED FROM THE CUSTODY OF THE COMPETENT DIVISION OF R&D DEPARTMENT EXCEPT AS AUTHORIZED BY COMPAL ELECTRONICS, INC. NEITHER THIS SHEET NOR THE INFORMATION IT CONTAINS MAY BE USED BY OR DISCLOSED TO ANY THIRD PARTY WITHOUT PRIOR WRITTEN CONSENT OF COMPAL ELECTRONICS, INC.

Compal Electronics, Inc.

Title: SCHEMATIC, M/B LA-2781

Size: B | Document Number: 401353 | Rev: B

Date: 星期日, 一月 01, 2006 | Sheet 31 of 50

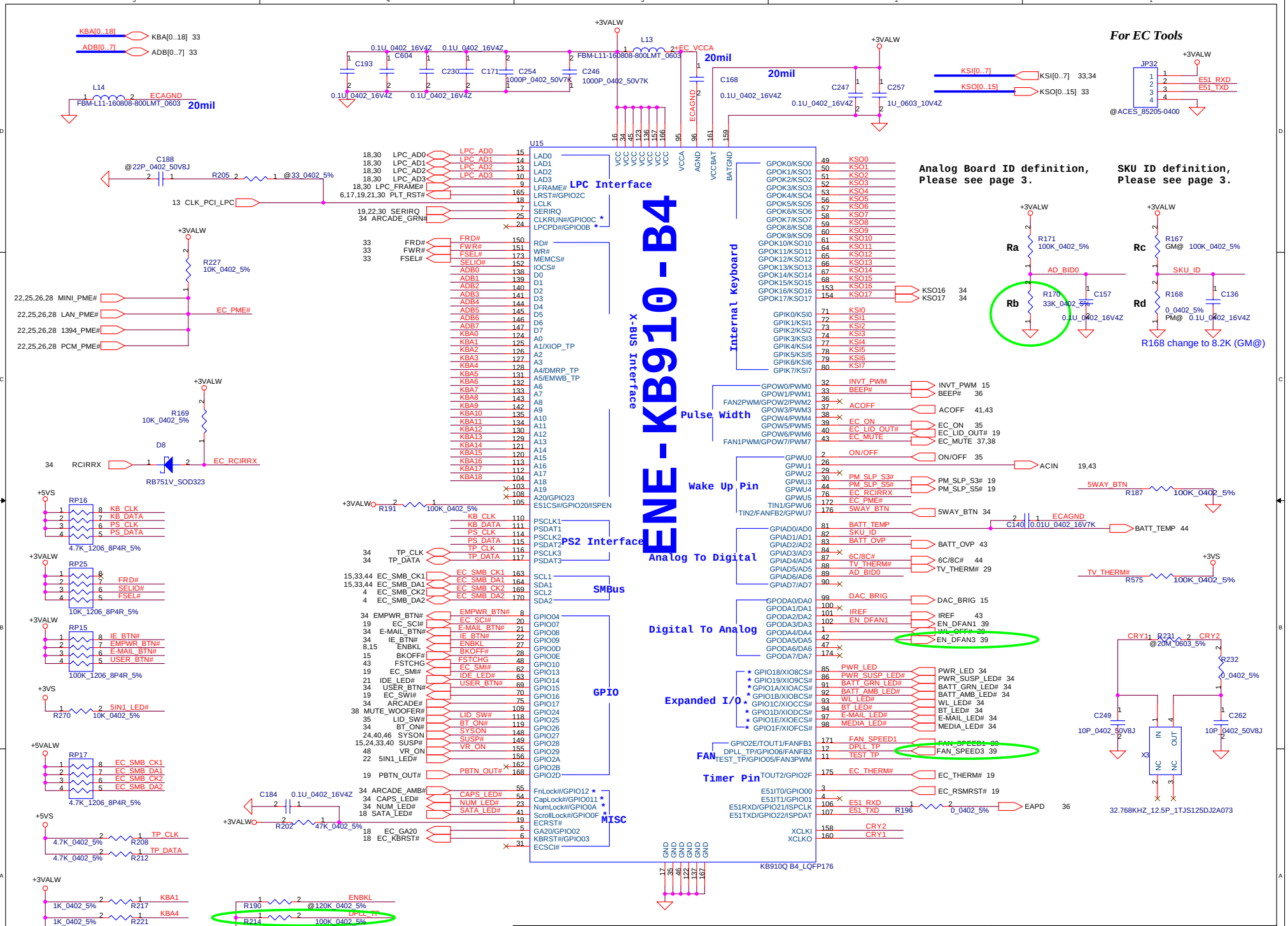

Security Classification	Compal Secret Data		
Issued Date	2005/07/29	Deciphered Date	2006/07/29

THIS SHEET OF ENGINEERING DRAWING IS THE PROPRIETARY PROPERTY OF COMPAL ELECTRONICS, INC. AND CONTAINS CONFIDENTIAL AND TRADE SECRET INFORMATION. THIS SHEET MAY NOT BE TRANSFERED FROM THE CUSTODY OF THE COMPETENT DIVISION OF R&D DEPARTMENT EXCEPT AS AUTHORIZED BY COMPAL ELECTRONICS, INC. NEITHER THIS SHEET NOR THE INFORMATION IT CONTAINS MAY BE USED BY OR DISCLOSED TO ANY THIRD PARTY WITHOUT PRIOR WRITTEN CONSENT OF COMPAL ELECTRONICS, INC.

Compal Electronics, Inc.

Title: SCHEMATIC, M/B LA-2781

Size	Document Number	Rev
Custom	401353	B

Date: 星期日, 一月 01, 2006 | Sheet 32 of 50

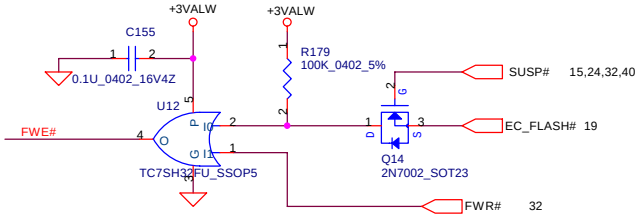

INT_KBD Conn.

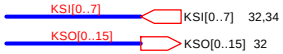

512KB Flash ROM

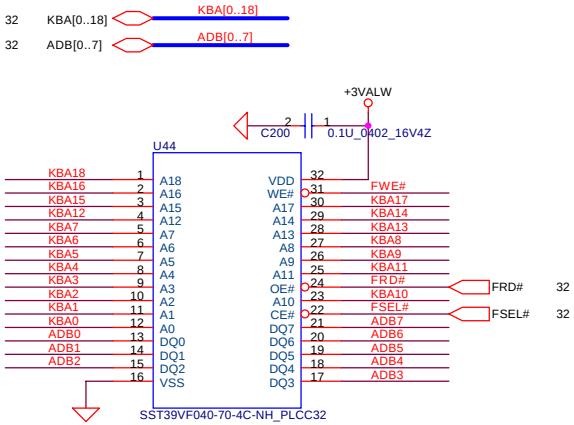

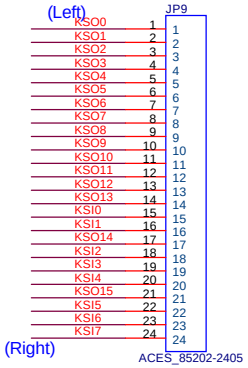

ECQ60 for 17"

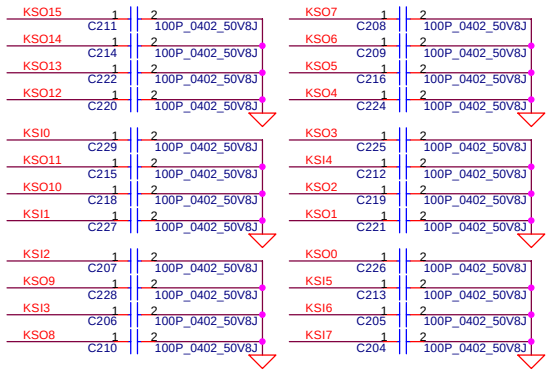

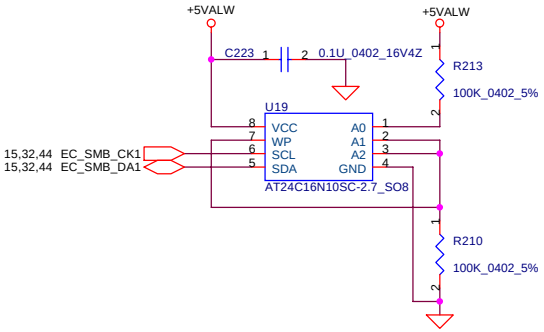

Security Classification	Compal Secret Data		
Issued Date	2005/07/29	Deciphered Date	2006/07/29

THIS SHEET OF ENGINEERING DRAWING IS THE PROPRIETARY PROPERTY OF COMPAL ELECTRONICS, INC. AND CONTAINS CONFIDENTIAL AND TRADE SECRET INFORMATION. THIS SHEET MAY NOT BE TRANSFERED FROM THE CUSTODY OF THE COMPETENT DIVISION OF R&D DEPARTMENT EXCEPT AS AUTHORIZED BY COMPAL ELECTRONICS, INC. NEITHER THIS SHEET NOR THE INFORMATION IT CONTAINS MAY BE USED BY OR DISCLOSED TO ANY THIRD PARTY WITHOUT PRIOR WRITTEN CONSENT OF COMPAL ELECTRONICS, INC.

Compal Electronics, Inc.

Title: SCHEMATIC, M/B LA-2781

Size: B | Document Number: 401353 | Rev: B

Date: 星期日, 一月 01, 2006 | Sheet 33 of 50

MDC Conn.

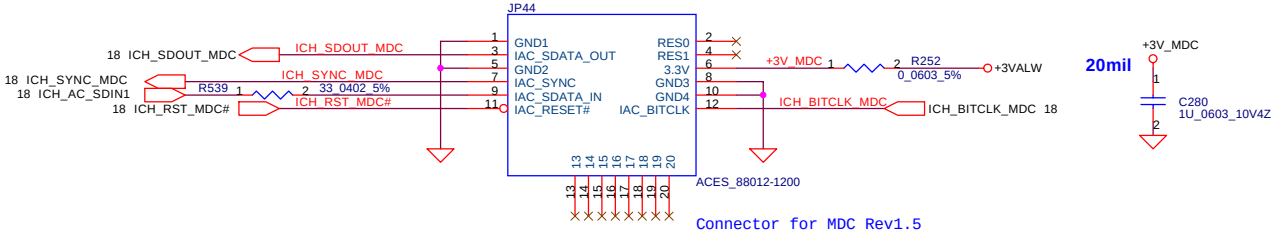

To Media/B Conn.

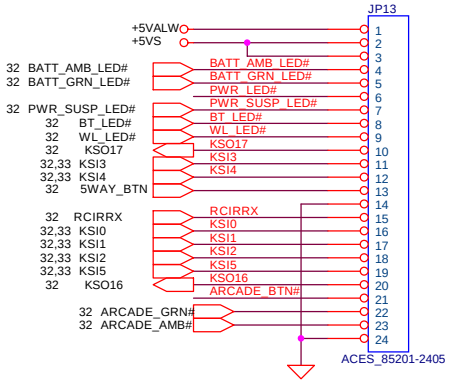

To TP/B Conn.

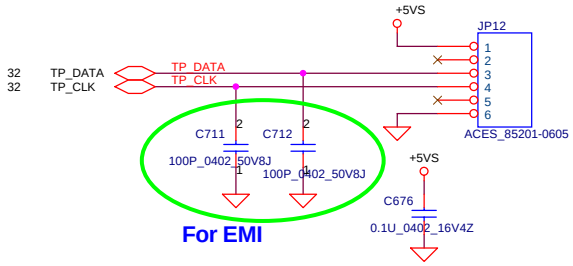

To LED/B Conn.

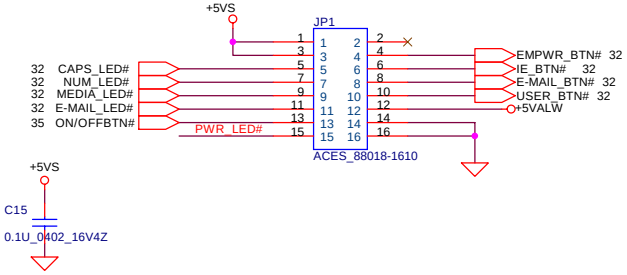

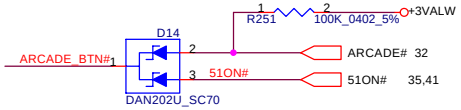

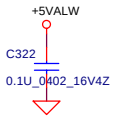

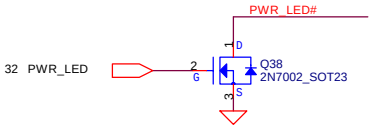

	KSO16	KSO17
KSI0	VOL_UP	LEFT
KSI1	RIGHT	VOL_DOWN
KSI2	PLAY	ENTER
KSI3	STOP	BT_EN#
KSI4	NEXT	WL_EN#
KSI5	REV	

Bluetooth Conn.

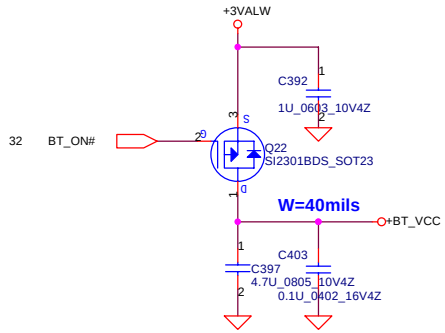

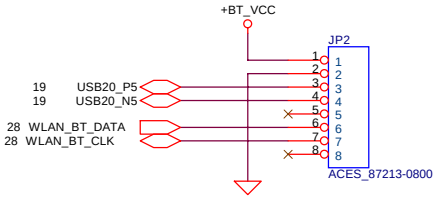

Security Classification	Compal Secret Data		
Issued Date	2005/07/29	Deciphered Date	2006/07/29

THIS SHEET OF ENGINEERING DRAWING IS THE PROPRIETARY PROPERTY OF COMPAL ELECTRONICS, INC. AND CONTAINS CONFIDENTIAL AND TRADE SECRET INFORMATION. THIS SHEET MAY NOT BE TRANSFERED FROM THE CUSTODY OF THE COMPETENT DIVISION OF R&D DEPARTMENT EXCEPT AS AUTHORIZED BY COMPAL ELECTRONICS, INC. NEITHER THIS SHEET NOR THE INFORMATION IT CONTAINS MAY BE USED BY OR DISCLOSED TO ANY THIRD PARTY WITHOUT PRIOR WRITTEN CONSENT OF COMPAL ELECTRONICS, INC.

Compal Electronics, Inc.

Title: SCHEMATIC, M/B LA-2781

Size: B | Document Number: 401353 | Rev: B

Date: 星期日, 一月 01, 2006 | Sheet 34 of 50

ON/OFF switch

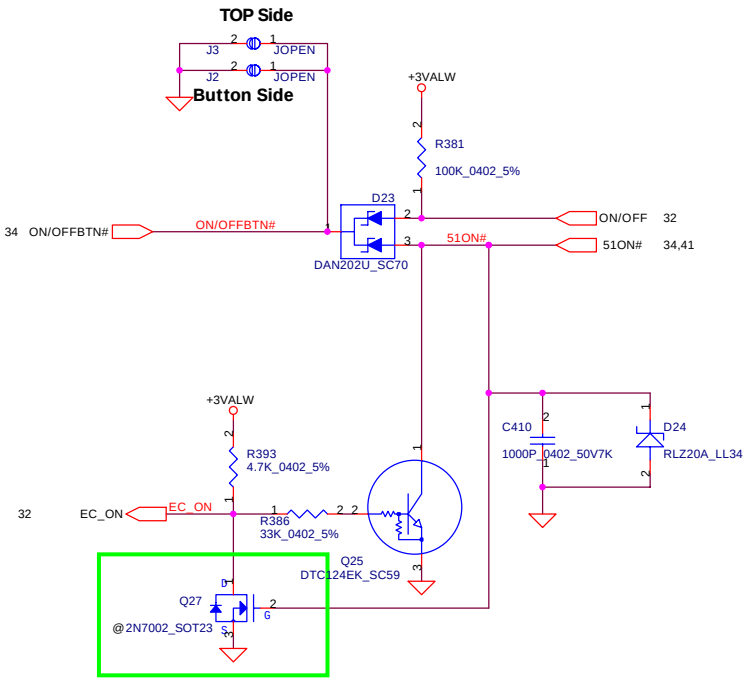

For Remove Control Issue

Lid Switch

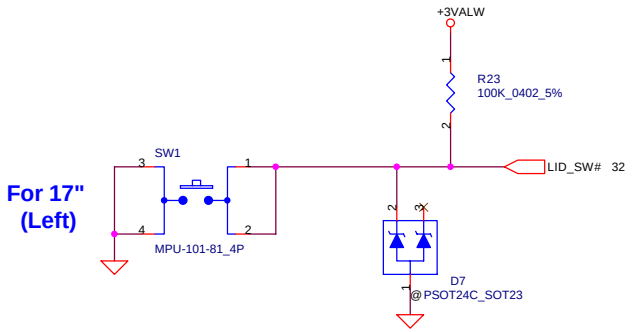

For 17" (Left)

RTC Battery

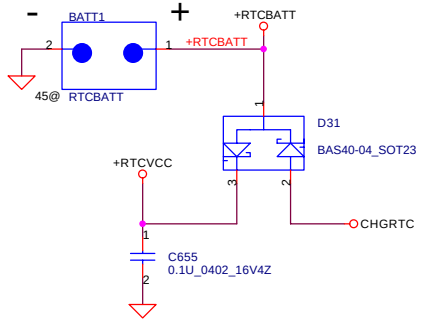

Power ON Circuit

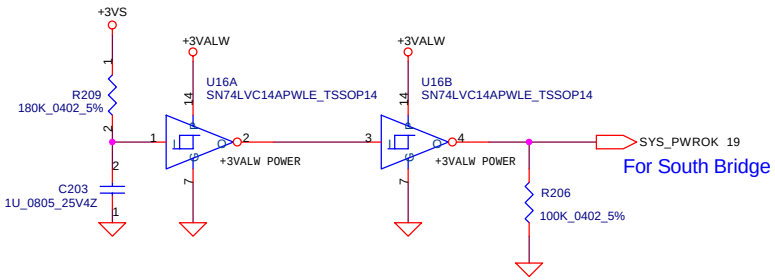

For South Bridge

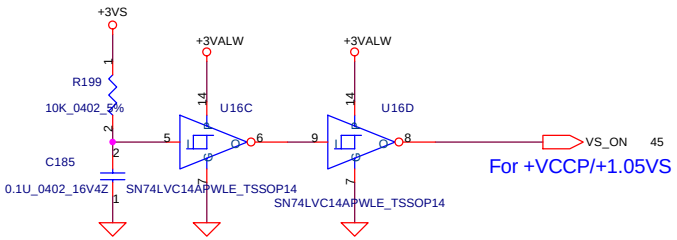

For +VCCP/+1.05VS

Security Classification	Compal Secret Data		
Issued Date	2005/07/29	Deciphered Date	2006/07/29

THIS SHEET OF ENGINEERING DRAWING IS THE PROPRIETARY PROPERTY OF COMPAL ELECTRONICS, INC. AND CONTAINS CONFIDENTIAL AND TRADE SECRET INFORMATION. THIS SHEET MAY NOT BE TRANSFERED FROM THE CUSTODY OF THE COMPETENT DIVISION OF R&D DEPARTMENT EXCEPT AS AUTHORIZED BY COMPAL ELECTRONICS, INC. NEITHER THIS SHEET NOR THE INFORMATION IT CONTAINS MAY BE USED BY OR DISCLOSED TO ANY THIRD PARTY WITHOUT PRIOR WRITTEN CONSENT OF COMPAL ELECTRONICS, INC.

Compal Electronics, Inc.

Title: SCHEMATIC, M/B LA-2781

Size: B | Document Number: 401353 | Rev: B

Date: 星期日, 一月 01, 2006 | Sheet 35 of 50

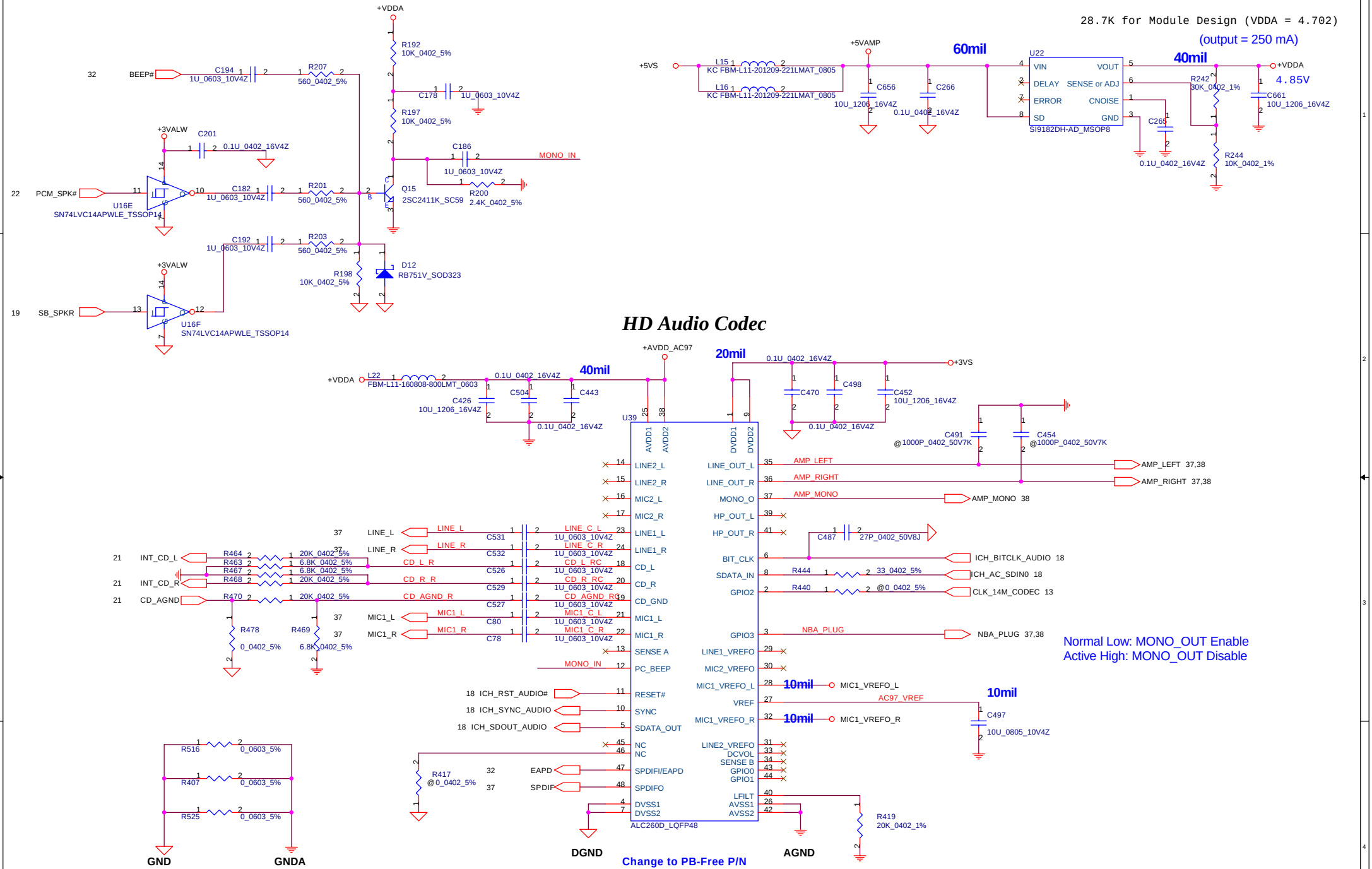

Security Classification	Compal Secret Data		
Issued Date	2005/07/29	Deciphered Date	2006/07/29

THIS SHEET OF ENGINEERING DRAWING IS THE PROPRIETARY PROPERTY OF COMPAL ELECTRONICS, INC. AND CONTAINS CONFIDENTIAL AND TRADE SECRET INFORMATION. THIS SHEET MAY NOT BE TRANSFERED FROM THE CUSTODY OF THE COMPETENT DIVISION OF R&D DEPARTMENT EXCEPT AS AUTHORIZED BY COMPAL ELECTRONICS, INC. NEITHER THIS SHEET NOR THE INFORMATION IT CONTAINS MAY BE USED BY OR DISCLOSED TO ANY THIRD PARTY WITHOUT PRIOR WRITTEN CONSENT OF COMPAL ELECTRONICS, INC.

Compal Electronics, Inc.

Title: SCHEMATIC, M/B LA-2781

Size: B | Document Number: 401353 | Rev: B

Date: 星期日, 一月 01, 2006 | Sheet 36 of 50

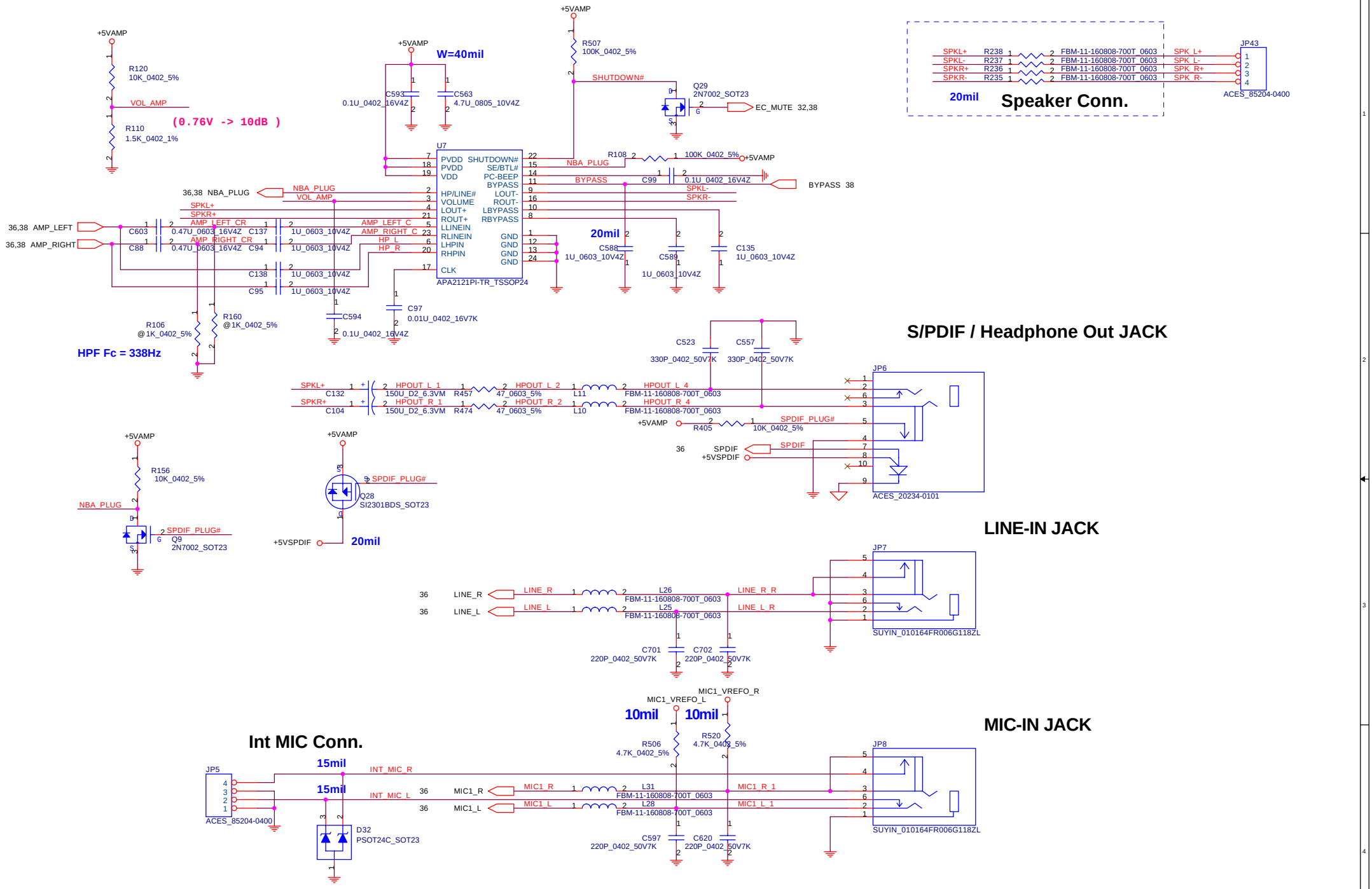

Security Classification	Compal Secret Data		
Issued Date	2005/07/29	Deciphered Date	2006/07/29

THIS SHEET OF ENGINEERING DRAWING IS THE PROPRIETARY PROPERTY OF COMPAL ELECTRONICS, INC. AND CONTAINS CONFIDENTIAL AND TRADE SECRET INFORMATION. THIS SHEET MAY NOT BE TRANSFERED FROM THE CUSTODY OF THE COMPETENT DIVISION OF R&D DEPARTMENT EXCEPT AS AUTHORIZED BY COMPAL ELECTRONICS, INC. NEITHER THIS SHEET NOR THE INFORMATION IT CONTAINS MAY BE USED BY OR DISCLOSED TO ANY THIRD PARTY WITHOUT PRIOR WRITTEN CONSENT OF COMPAL ELECTRONICS, INC.

Compal Electronics, Inc.

Title: SCHEMATIC, M/B LA-2781

Size: B | Document Number: 401353 | Rev: B

Date: 星期日, 一月 01, 2006 | Sheet 37 of 50

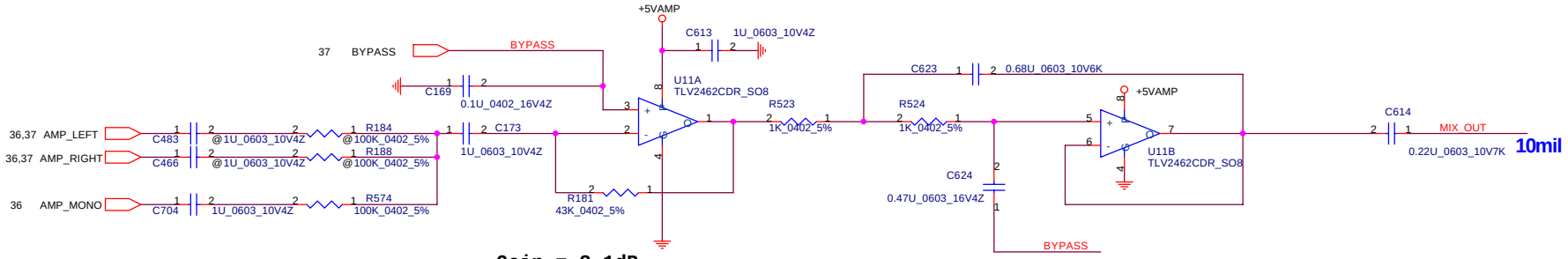

Gain = 3.1dB

Fc(LPF)= 220Hz

Fc(HPF)= 36.2Hz
Gain = 15.9dB

Sub Woofer Conn.

30mil

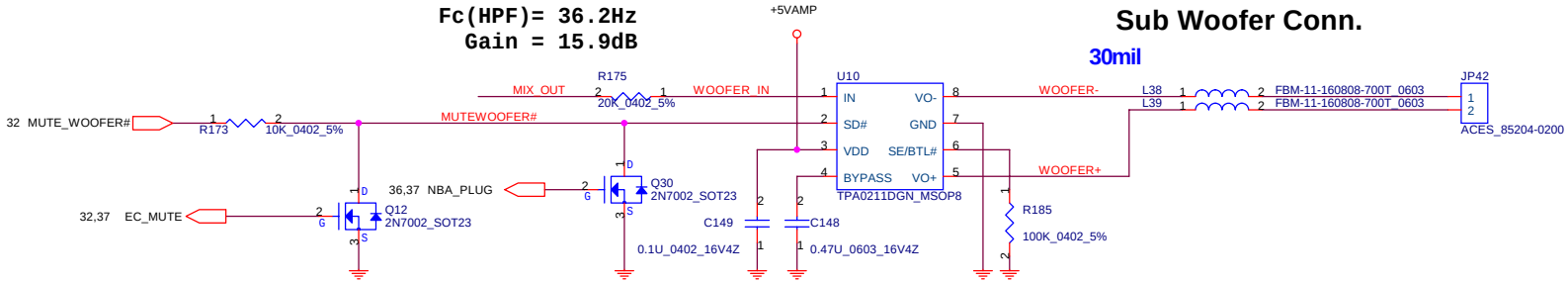

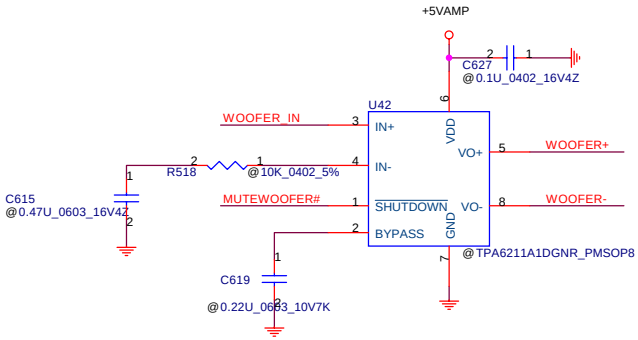

Security Classification	Compal Secret Data		
Issued Date	2005/07/29	Deciphered Date	2006/07/29

THIS SHEET OF ENGINEERING DRAWING IS THE PROPRIETARY PROPERTY OF COMPAL ELECTRONICS, INC. AND CONTAINS CONFIDENTIAL AND TRADE SECRET INFORMATION. THIS SHEET MAY NOT BE TRANSFERED FROM THE CUSTODY OF THE COMPETENT DIVISION OF R&D DEPARTMENT EXCEPT AS AUTHORIZED BY COMPAL ELECTRONICS, INC. NEITHER THIS SHEET NOR THE INFORMATION IT CONTAINS MAY BE USED BY OR DISCLOSED TO ANY THIRD PARTY WITHOUT PRIOR WRITTEN CONSENT OF COMPAL ELECTRONICS, INC.

Compal Electronics, Inc.

Title: SCHEMATIC, M/B LA-2781

Size: B | Document Number: 401353 | Rev: B

Date: 星期日, 一月 01, 2006 | Sheet 38 of 50

FAN Conn

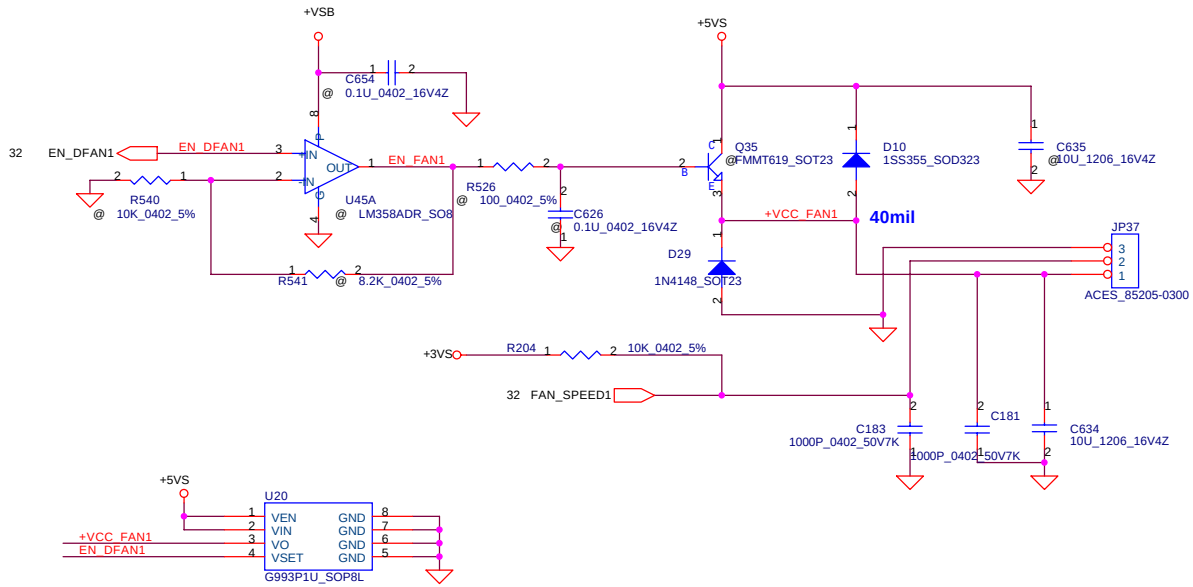

Change to PB-Free P/N

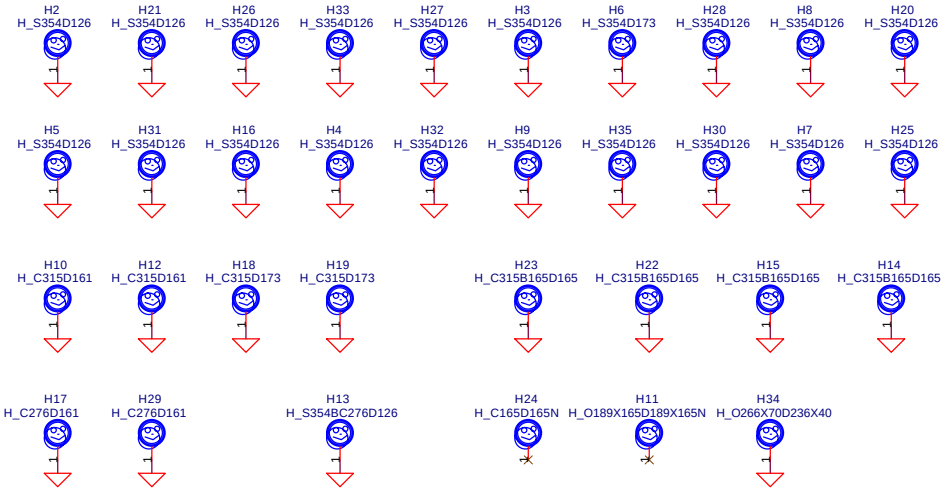

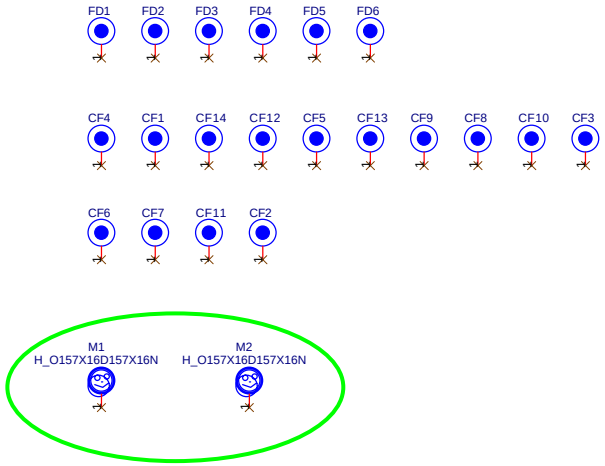

Add 2ND FAN Circuit for TV-Tuner

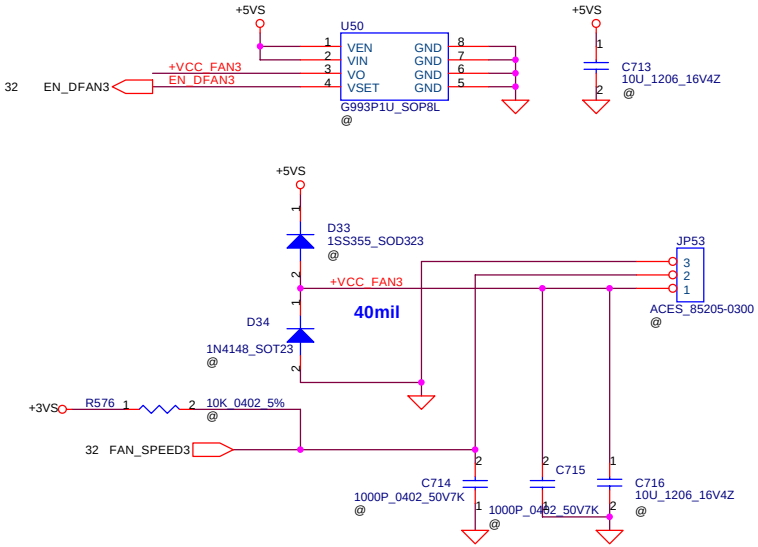

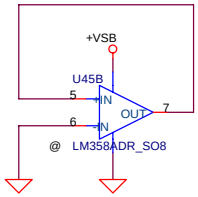

Security Classification	Compal Secret Data		
Issued Date	2005/07/29	Deciphered Date	2006/07/29

THIS SHEET OF ENGINEERING DRAWING IS THE PROPRIETARY PROPERTY OF COMPAL ELECTRONICS, INC. AND CONTAINS CONFIDENTIAL AND TRADE SECRET INFORMATION. THIS SHEET MAY NOT BE TRANSFERED FROM THE CUSTODY OF THE COMPETENT DIVISION OF R&D DEPARTMENT EXCEPT AS AUTHORIZED BY COMPAL ELECTRONICS, INC. NEITHER THIS SHEET NOR THE INFORMATION IT CONTAINS MAY BE USED BY OR DISCLOSED TO ANY THIRD PARTY WITHOUT PRIOR WRITTEN CONSENT OF COMPAL ELECTRONICS, INC.

Compal Electronics, Inc.

Title: SCHEMATIC, M/B LA-2781

Size: B | Document Number: 401353 | Rev: B

Date: 星期日, 一月 01, 2006 | Sheet 39 of 50

+5VALW TO +5VS

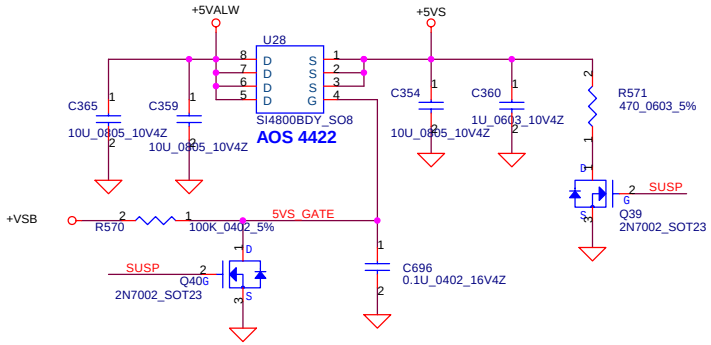

+1.5VALW TO +1.5VS

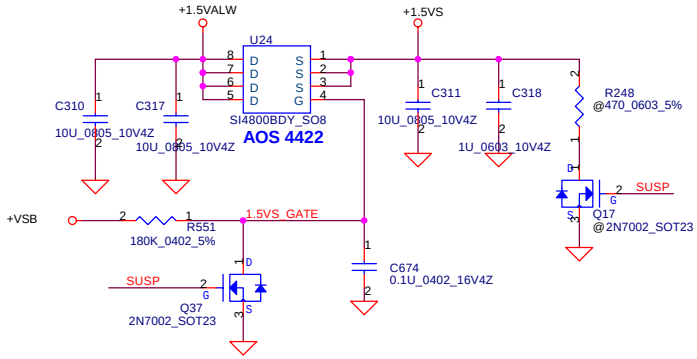

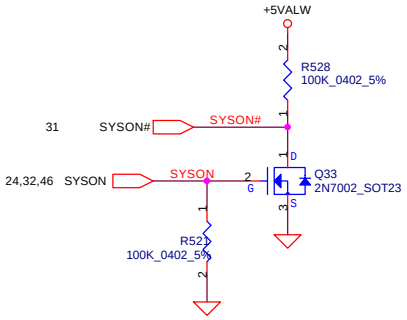

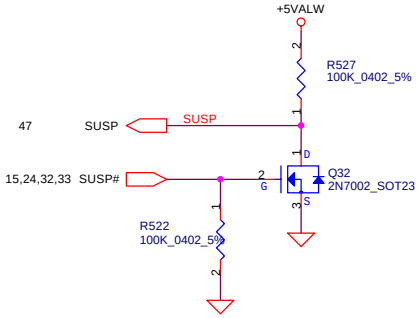

+3VALW TO +3VS

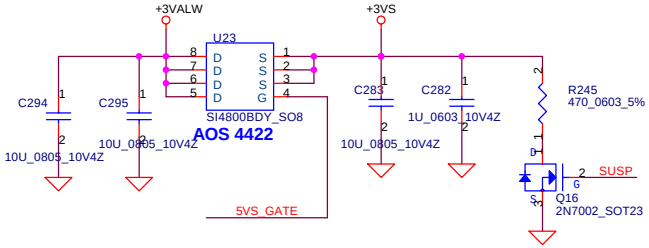

+1.8V to +1.8VS

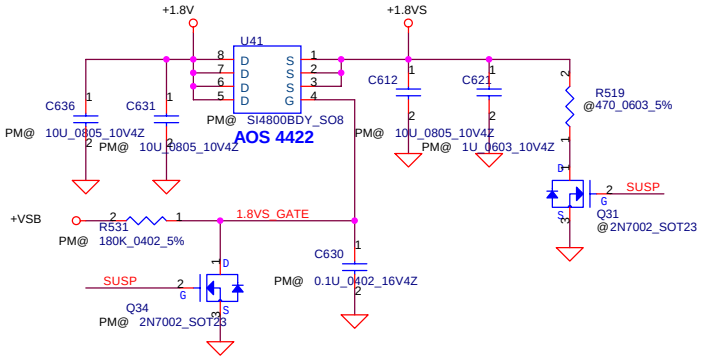

Security Classification	Compal Secret Data		
Issued Date	2005/07/29	Deciphered Date	2006/07/29

THIS SHEET OF ENGINEERING DRAWING IS THE PROPRIETARY PROPERTY OF COMPAL ELECTRONICS, INC. AND CONTAINS CONFIDENTIAL AND TRADE SECRET INFORMATION. THIS SHEET MAY NOT BE TRANSFERED FROM THE CUSTODY OF THE COMPETENT DIVISION OF R&D DEPARTMENT EXCEPT AS AUTHORIZED BY COMPAL ELECTRONICS, INC. NEITHER THIS SHEET NOR THE INFORMATION IT CONTAINS MAY BE USED BY OR DISCLOSED TO ANY THIRD PARTY WITHOUT PRIOR WRITTEN CONSENT OF COMPAL ELECTRONICS, INC.

Compal Electronics, Inc.

Title: SCHEMATIC, M/B LA-2781

Size: B | Document Number: 401353 | Rev: B

Date: 星期日, 一月 01, 2006 | Sheet 40 of 50

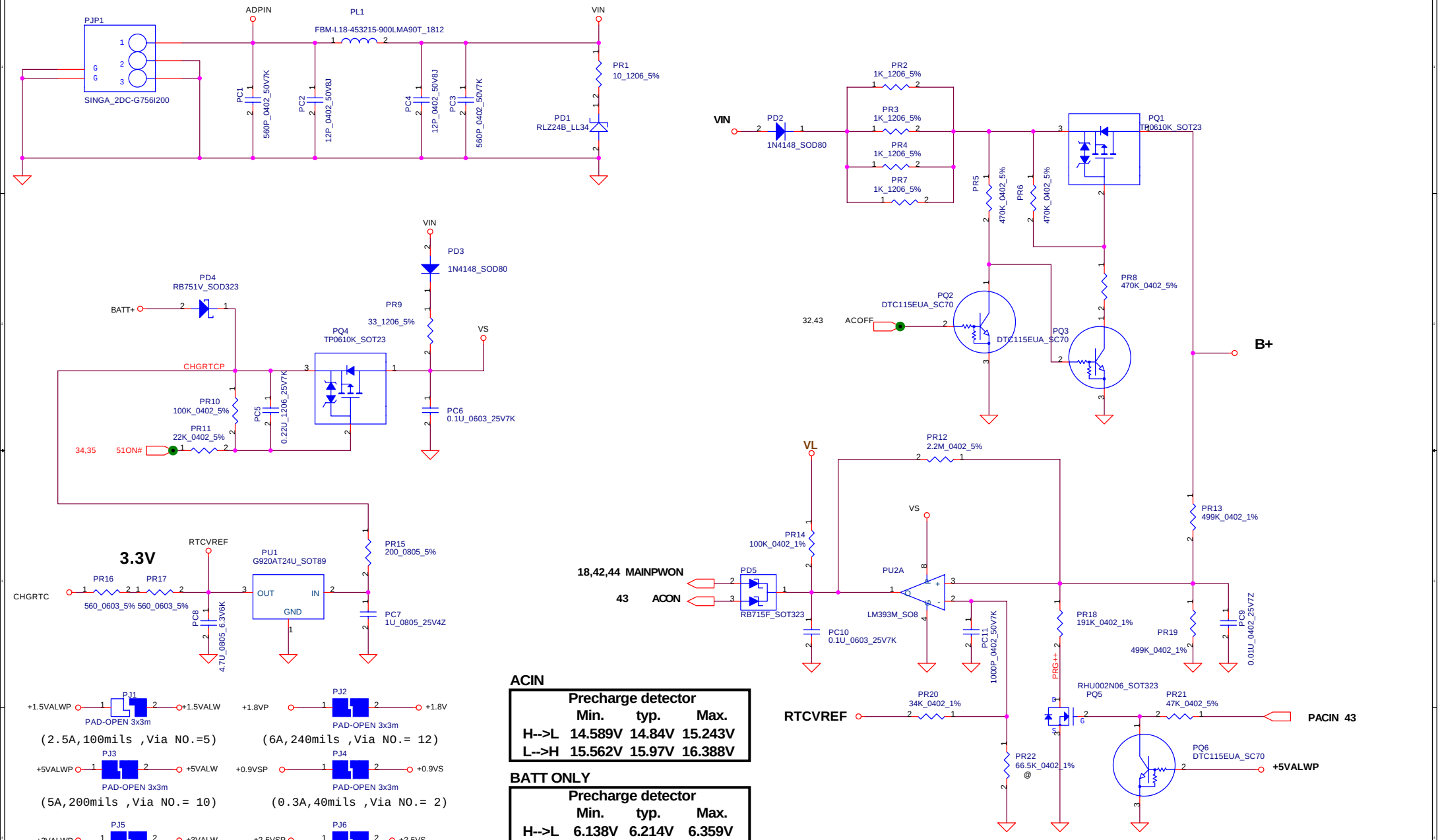

ACIN

Precharge detector	Min.	typ.	Max.
H-->L	14.589V	14.84V	15.243V
L-->H	15.562V	15.97V	16.388V

BATT ONLY

Precharge detector	Min.	typ.	Max.
H-->L	6.138V	6.214V	6.359V
L-->H	7.196V	7.349V	7.505V

Security Classification	Compal Secret Data		
Issued Date	2005/07/29	Deciphered Date	2006/07/29

THIS SHEET OF ENGINEERING DRAWING IS THE PROPRIETARY PROPERTY OF COMPAL ELECTRONICS, INC. AND CONTAINS CONFIDENTIAL AND TRADE SECRET INFORMATION. THIS SHEET MAY NOT BE TRANSFERED FROM THE CUSTODY OF THE COMPETENT DIVISION OF R&D DEPARTMENT EXCEPT AS AUTHORIZED BY COMPAL ELECTRONICS, INC. NEITHER THIS SHEET NOR THE INFORMATION IT CONTAINS MAY BE USED BY OR DISCLOSED TO ANY THIRD PARTY WITHOUT PRIOR WRITTEN CONSENT OF COMPAL ELECTRONICS, INC.

Compal Electronics, Inc.

Title: SCHEMATIC, M/B LA-2781

Size: B | Document Number: 401353 | Rev: B

Date: 星期日, 一月 01, 2006 | Sheet 41 of 50

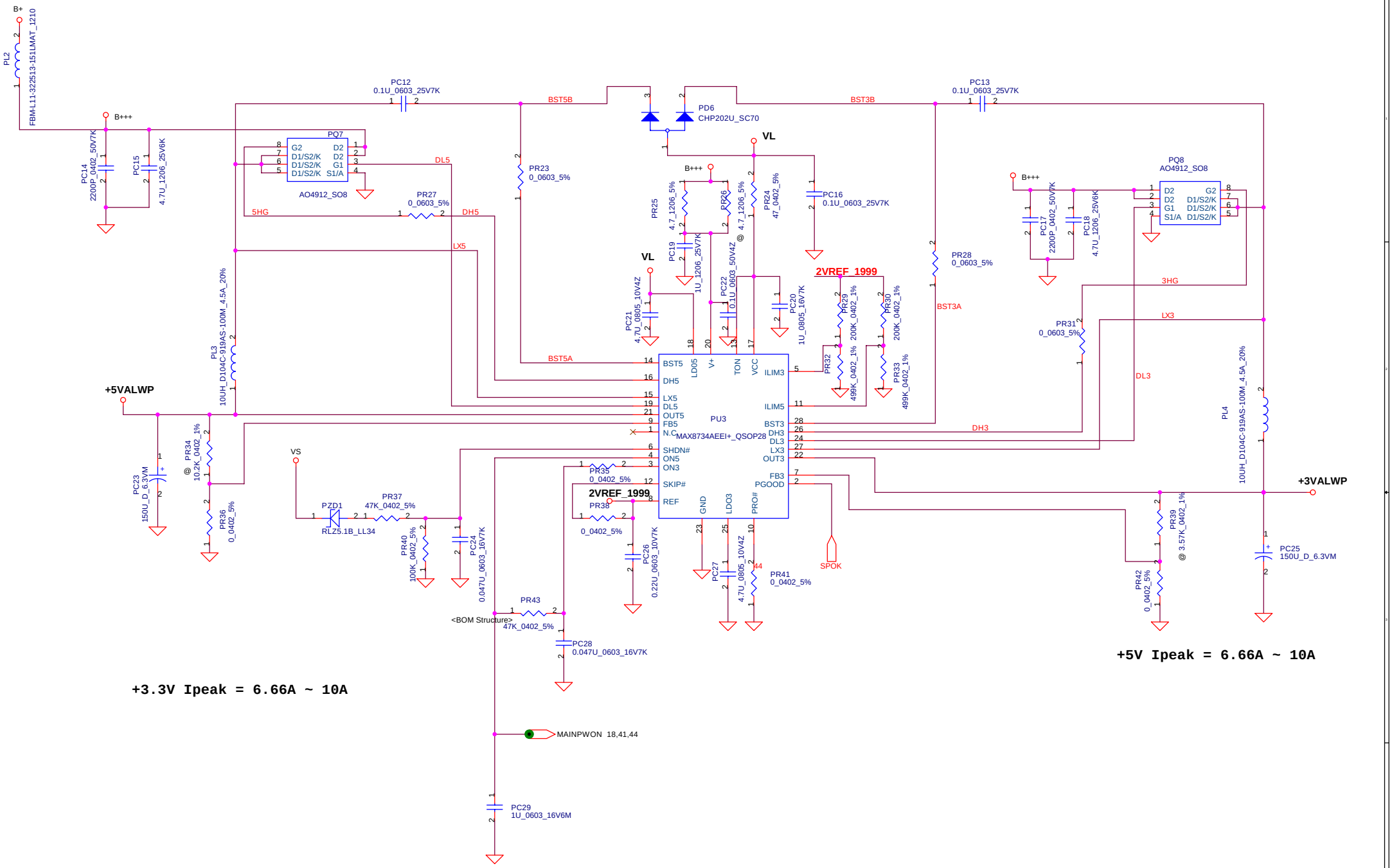

Security Classification	Compal Secret Data		
Issued Date	2005/07/29	Deciphered Date	2006/07/29

THIS SHEET OF ENGINEERING DRAWING IS THE PROPRIETARY PROPERTY OF COMPAL ELECTRONICS, INC. AND CONTAINS CONFIDENTIAL AND TRADE SECRET INFORMATION. THIS SHEET MAY NOT BE TRANSFERED FROM THE CUSTODY OF THE COMPETENT DIVISION OF R&D DEPARTMENT EXCEPT AS AUTHORIZED BY COMPAL ELECTRONICS, INC. NEITHER THIS SHEET NOR THE INFORMATION IT CONTAINS MAY BE USED BY OR DISCLOSED TO ANY THIRD PARTY WITHOUT PRIOR WRITTEN CONSENT OF COMPAL ELECTRONICS, INC.

Compal Electronics, Inc.

Title: SCHEMATIC, M/B LA-2781

Size: Custom | Document Number: 401353 | Rev: B

Date: 星期日, 一月 01, 2006 | Sheet 42 of 50

Charger

Iadp=0~4.74A(90W)

Fosc=14100/Rt=14100/47=300KHz

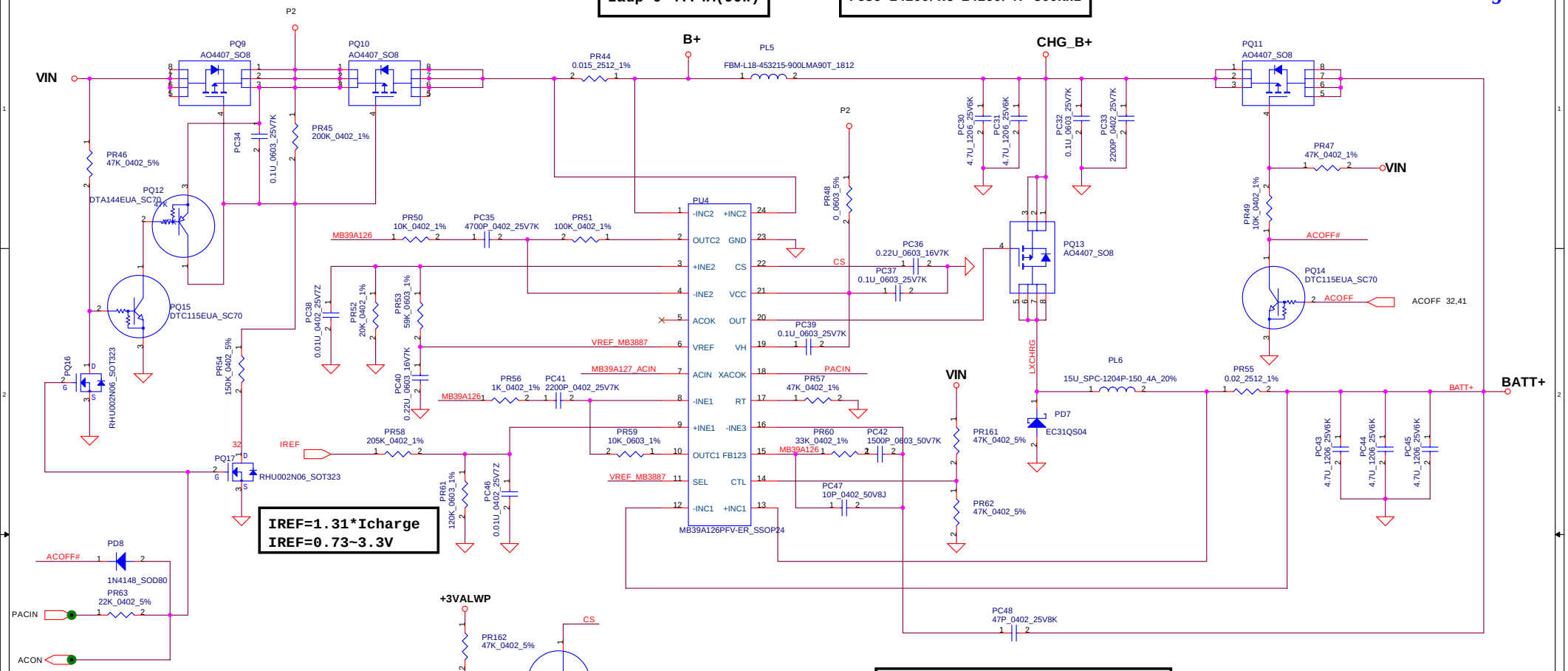

IREF=1.31*Icharge
IREF=0.73~3.3V

LI-4S :17.8V----BATT-OVP=1.9758V
BATT-OVP=0.111*BATT+

CC=3.046A
(120K/(205K+120K))*3.3V=1.2184V
1.2184/(20*0.02)=3.046A

CP Point=4.216A
5V*(59K/(20k+59k))=1.265V
1.265V/(20*0.015)=4.216A

Charge voltage
4S CC-CV MODE : 16.8V
VCHG is H

Vin Detector

L->H	18.49	17.92	17.35
H->L	17.17	16.64	16.11

Security Classification	Compal Secret Data		
Issued Date	2005/07/29	Deciphered Date	2006/07/29

THIS SHEET OF ENGINEERING DRAWING IS THE PROPRIETARY PROPERTY OF COMPAL ELECTRONICS, INC. AND CONTAINS CONFIDENTIAL AND TRADE SECRET INFORMATION. THIS SHEET MAY NOT BE TRANSFERED FROM THE CUSTODY OF THE COMPETENT DIVISION OF R&D DEPARTMENT EXCEPT AS AUTHORIZED BY COMPAL ELECTRONICS, INC. NEITHER THIS SHEET NOR THE INFORMATION IT CONTAINS MAY BE USED BY OR DISCLOSED TO ANY THIRD PARTY WITHOUT PRIOR WRITTEN CONSENT OF COMPAL ELECTRONICS, INC.

Compal Electronics, Inc.

Title: SCHEMATIC, M/B LA-2781

Size: B | Document Number: 401353 | Rev: B

Date: 星期日, 一月 01, 2006 | Sheet 43 of 50

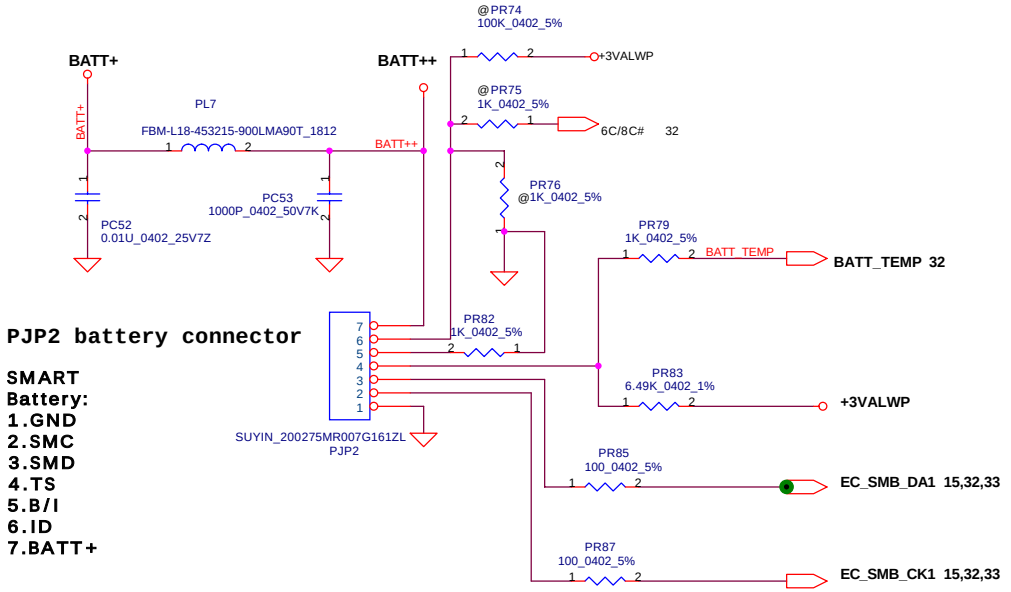

PH1 under CPU botten side :
CPU thermal protection at 80 degree C
Recovery at 44(45) degree C

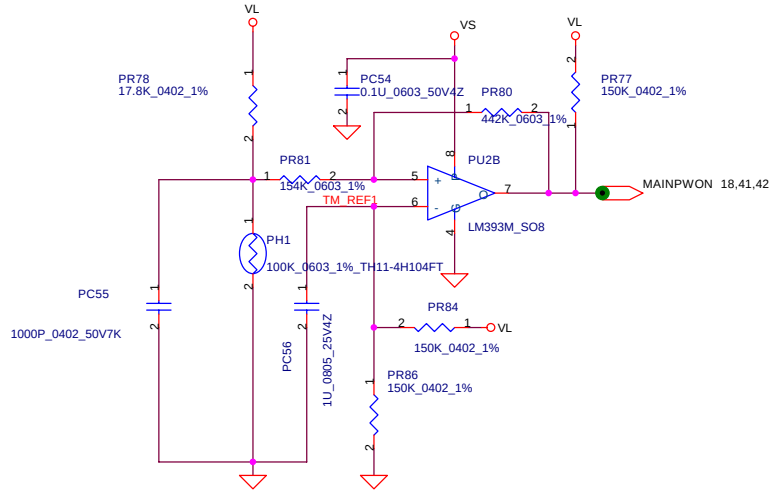

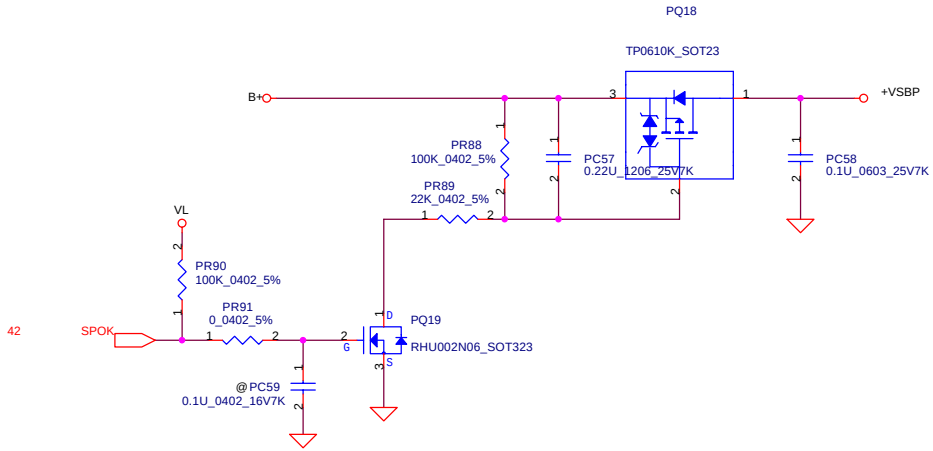

Security Classification	Compal Secret Data		
Issued Date	2005/07/29	Deciphered Date	2006/07/29

THIS SHEET OF ENGINEERING DRAWING IS THE PROPRIETARY PROPERTY OF COMPAL ELECTRONICS, INC. AND CONTAINS CONFIDENTIAL AND TRADE SECRET INFORMATION. THIS SHEET MAY NOT BE TRANSFERED FROM THE CUSTODY OF THE COMPETENT DIVISION OF R&D DEPARTMENT EXCEPT AS AUTHORIZED BY COMPAL ELECTRONICS, INC. NEITHER THIS SHEET NOR THE INFORMATION IT CONTAINS MAY BE USED BY OR DISCLOSED TO ANY THIRD PARTY WITHOUT PRIOR WRITTEN CONSENT OF COMPAL ELECTRONICS, INC.

Compal Electronics, Inc.

Title: SCHEMATIC, M/B LA-2781

Size: B | Document Number: 401353 | Rev: B

Date: 星期日, 一月 01, 2006 | Sheet 44 of 50

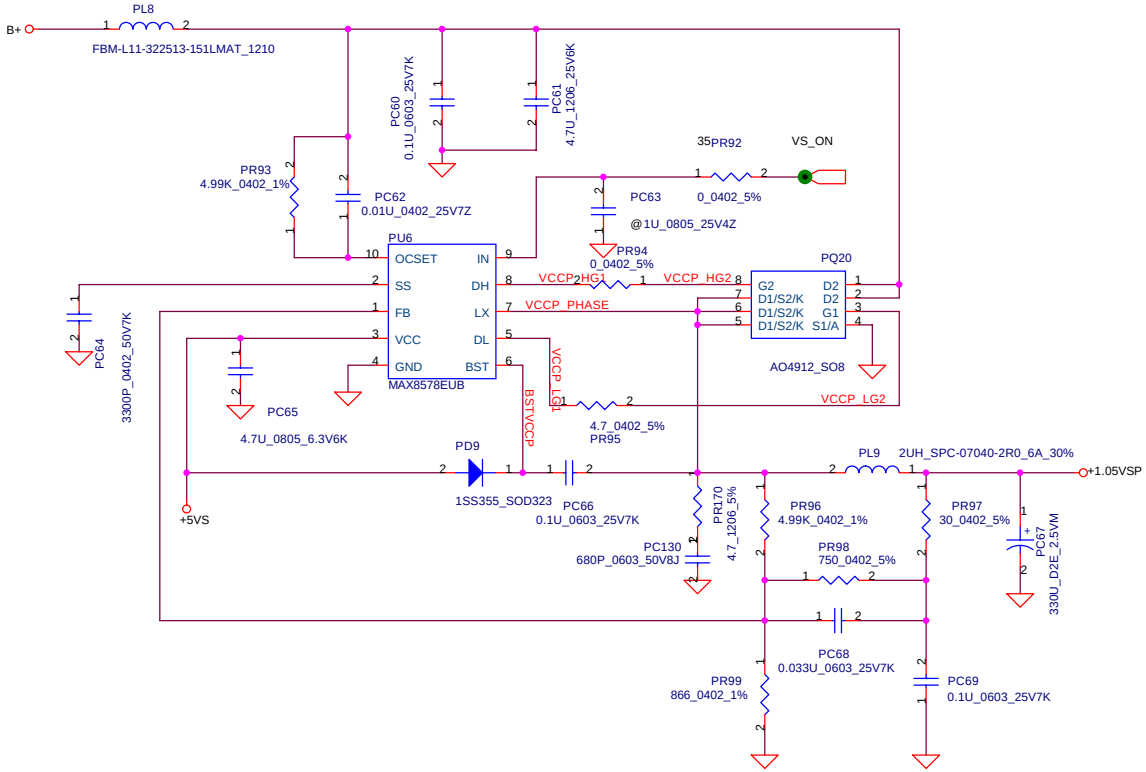

Security Classification	Compal Secret Data		
Issued Date	2005/07/29	Deciphered Date	2006/07/29

THIS SHEET OF ENGINEERING DRAWING IS THE PROPRIETARY PROPERTY OF COMPAL ELECTRONICS, INC. AND CONTAINS CONFIDENTIAL AND TRADE SECRET INFORMATION. THIS SHEET MAY NOT BE TRANSFERED FROM THE CUSTODY OF THE COMPETENT DIVISION OF R&D DEPARTMENT EXCEPT AS AUTHORIZED BY COMPAL ELECTRONICS, INC. NEITHER THIS SHEET NOR THE INFORMATION IT CONTAINS MAY BE USED BY OR DISCLOSED TO ANY THIRD PARTY WITHOUT PRIOR WRITTEN CONSENT OF COMPAL ELECTRONICS, INC.

Compal Electronics, Inc.

Title: SCHEMATIC, M/B LA-2781

Size: B | Document Number: 401353 | Rev: B

Date: 星期日, 一月 01, 2006 | Sheet 45 of 50

+1.8VP O.C.P. =8.1A ~ 10.36A

+1.5VP Current limit = 8.2A ~10.64A

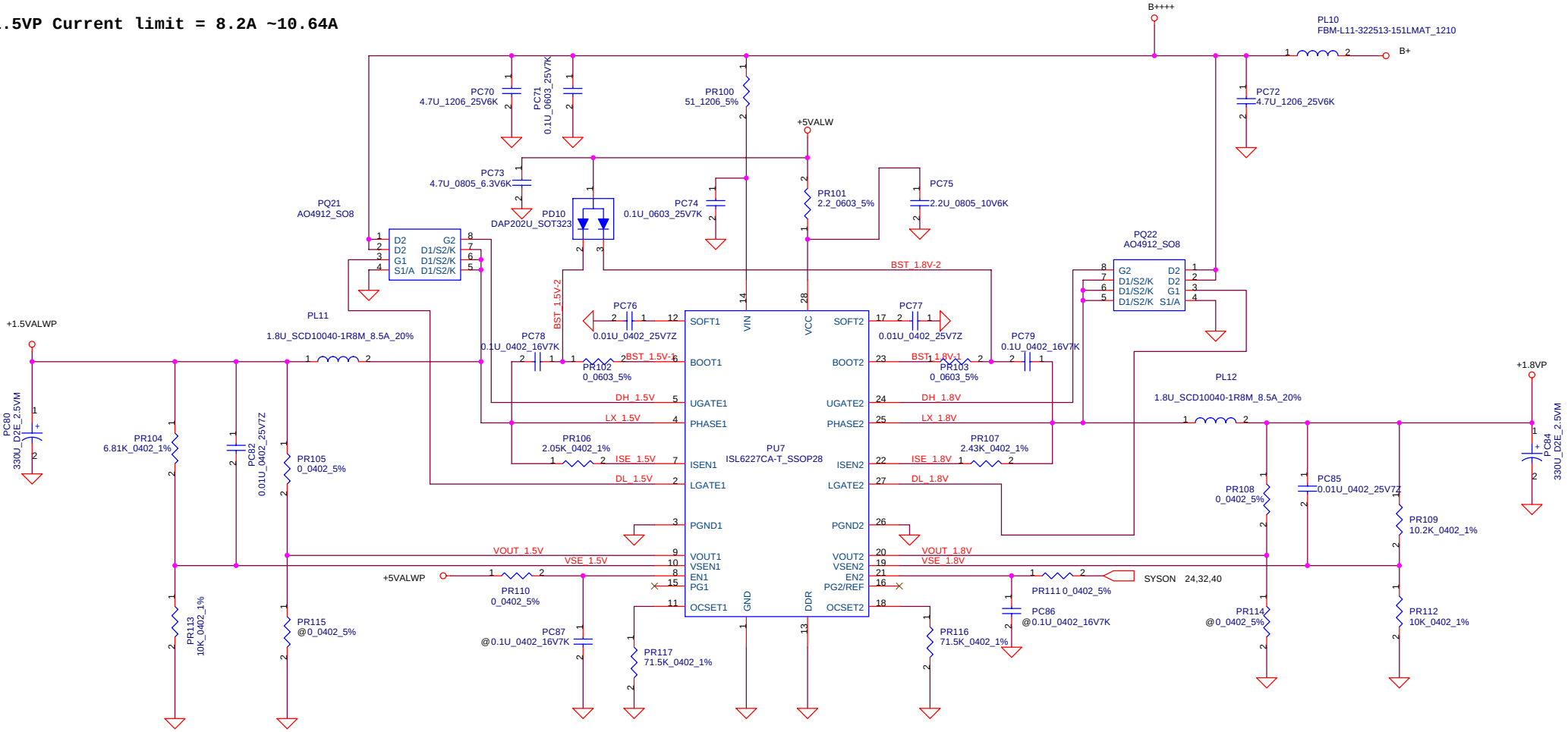

Security Classification	Compal Secret Data		
Issued Date	2005/07/29	Deciphered Date	2006/07/29

THIS SHEET OF ENGINEERING DRAWING IS THE PROPRIETARY PROPERTY OF COMPAL ELECTRONICS, INC. AND CONTAINS CONFIDENTIAL AND TRADE SECRET INFORMATION. THIS SHEET MAY NOT BE TRANSFERED FROM THE CUSTODY OF THE COMPETENT DIVISION OF R&D DEPARTMENT EXCEPT AS AUTHORIZED BY COMPAL ELECTRONICS, INC. NEITHER THIS SHEET NOR THE INFORMATION IT CONTAINS MAY BE USED BY OR DISCLOSED TO ANY THIRD PARTY WITHOUT PRIOR WRITTEN CONSENT OF COMPAL ELECTRONICS, INC.

Compal Electronics, Inc.

Title: SCHEMATIC, M/B LA-2781

Size: B | Document Number: 401353 | Rev: B

Date: 星期日, 一月 01, 2006 | Sheet 46 of 50

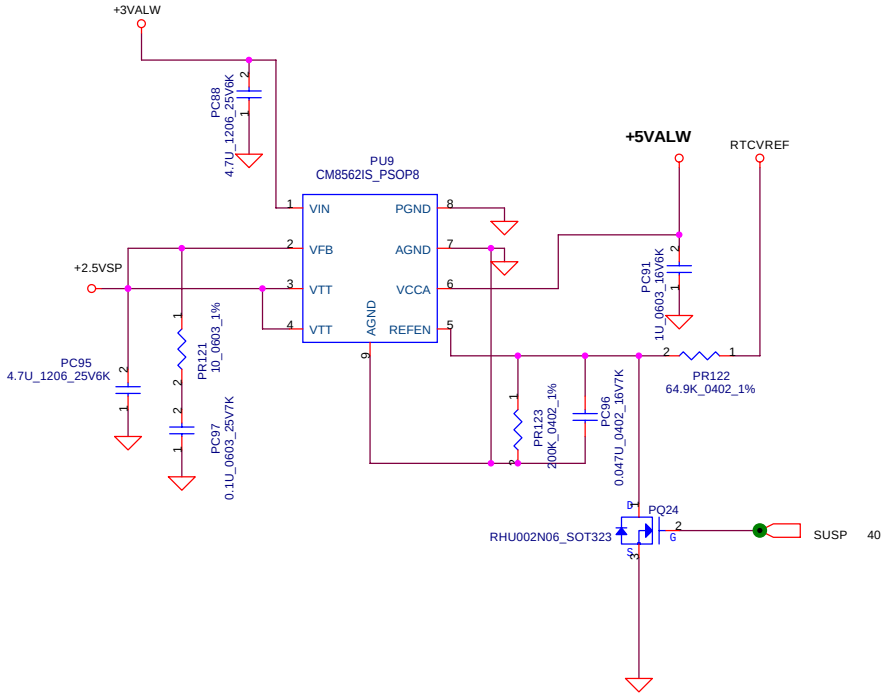

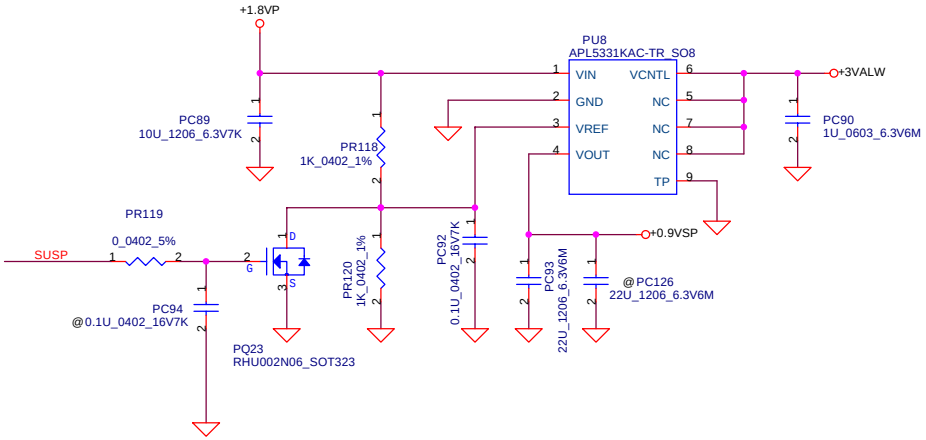

Security Classification	Compal Secret Data		
Issued Date	2005/07/29	Deciphered Date	2006/07/29

THIS SHEET OF ENGINEERING DRAWING IS THE PROPRIETARY PROPERTY OF COMPAL ELECTRONICS, INC. AND CONTAINS CONFIDENTIAL AND TRADE SECRET INFORMATION. THIS SHEET MAY NOT BE TRANSFERED FROM THE CUSTODY OF THE COMPETENT DIVISION OF R&D DEPARTMENT EXCEPT AS AUTHORIZED BY COMPAL ELECTRONICS, INC. NEITHER THIS SHEET NOR THE INFORMATION IT CONTAINS MAY BE USED BY OR DISCLOSED TO ANY THIRD PARTY WITHOUT PRIOR WRITTEN CONSENT OF COMPAL ELECTRONICS, INC.

Compal Electronics, Inc.

Title: SCHEMATIC, M/B LA-2781

Size: B | Document Number: 401353 | Rev: B

Date: 星期日, 一月 01, 2006 | Sheet 47 of 50

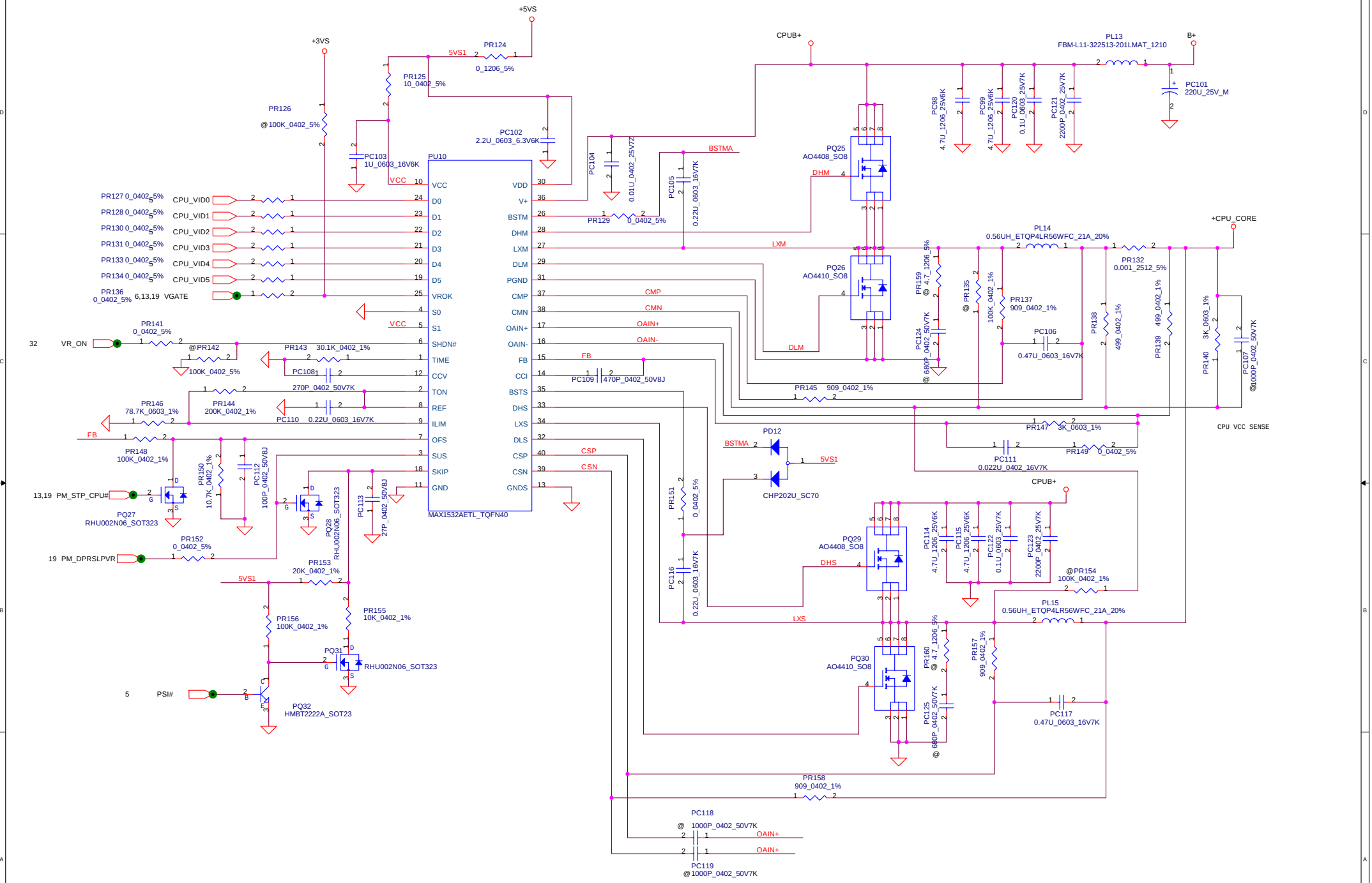

Security Classification	Compal Secret Data		
Issued Date	2005/07/29	Deciphered Date	2006/07/29

THIS SHEET OF ENGINEERING DRAWING IS THE PROPRIETARY PROPERTY OF COMPAL ELECTRONICS, INC. AND CONTAINS CONFIDENTIAL AND TRADE SECRET INFORMATION. THIS SHEET MAY NOT BE TRANSFERED FROM THE CUSTODY OF THE COMPETENT DIVISION OF R&D DEPARTMENT EXCEPT AS AUTHORIZED BY COMPAL ELECTRONICS, INC. NEITHER THIS SHEET NOR THE INFORMATION IT CONTAINS MAY BE USED BY OR DISCLOSED TO ANY THIRD PARTY WITHOUT PRIOR WRITTEN CONSENT OF COMPAL ELECTRONICS, INC.

Compal Electronics, Inc.

Title: SCHEMATIC, M/B LA-2781

Size: Custom | Document Number: 401353 | Rev: B

Date: 星期日, 一月 01, 2006 | Sheet 48 of 50

Version change list (P.I.R. List)

Item	Fixed Issue	Reason for change	Rev.	PG#	Modify List	B.Ver#	Phase
1	For HDQ70, change RTC change current.	Because the charge cuurent needs to meet battery spec.	0.1	41	Change PR16 and PR17 from SD028300000 to SD028560000.	0.1	DVT
2	For HDQ70, change MAX1999 to MAX8734A	Because MAX1999 has triggered UVP when AC Adapter plug in or plug out.	0.1	42	Change PU3 from SA019990000(S IC MAX1999EEI QSOP28 PWM) to SA00000G100(MAX8734AEEI+ QSOP 28P)	0.1	DVT
3	For HDQ70, fix Vin detector accuracy.	For HDQ70, fix Vin detector accuracy.	0.1	43	Change PR65 from SD034150200(S RES 1/16W 15K 0402 1%) to SD034000000(S RES 1/16W 0 0402 1%).	0.1	DVT
4	For HDQ70, fix Vin detector accuracy.	For HDQ70, fix Vin detector accuracy.	0.1	43	Change PR68 from SD034100300(S RES 1/16W 100K 0402 1%) to SD000008A00(S RES 1/16W 118K 0402 0.1%).	0.1	DVT
5	For HDQ70, fix Vin detector accuracy.	For HDQ70, fix Vin detector accuracy.	0.1	43	Change PR73 from SD034100200(S RES 1/16W 10K 0402 1%) to SD0000008B00(S RES 1/16W 10K 0402 0.1%).	0.1	DVT
6	For HDQ70, fix the battery temp curve.	Because we need to improve the curve of temp detector of battery more smoothly.	0.1	44	Change PR83 from SD034255200(S RES 1/16W 25.5K 0402 1%) to SD034649100(S RES 1/16W 6.49K 0402 1%).	0.1	DVT
7	For HDQ70, change 1.05VSP OCP point.	For HDQ70, change 1.05VSP OCP point.	0.1	45	Change PR93 from SD034412100(S RES 1/16W 4.12K 0402 1%) to SD034499100(S RES 1/16W 4.99K 0402 1%).	0.1	DVT
8	For HDQ70, fix the output voltage.	For HDQ70, fix the output voltage within spec.	0.1	45	Change PR96 from SD034715100(S RES 1/16W 7.15K 0402 1%) to SD034499100(S RES 1/16W 4.99K 0402 1%).	0.1	DVT
9	For HDQ70, fix the FB voltage.	For HDQ70, fix the FB voltage within spec.	0.1	45	Change PC68 from SE075682K00(S CER CAP 6800P 25V +-10% X7R 0402) to SE042333K00(S CER CAP .033U 25V K X7R 0603).	0.1	DVT
10	For HDQ70, add snuber on LX.	Add snuber on LX to improve high side noise.	0.1	45	Add PR170 SD011470BT9(S RES 1/10W 4.7 +-5% 1206).	0.1	DVT
11	For HDQ70, add snuber on LX.	Add snuber on LX to improve high side noise.	0.1	45	Add PC130 SE024681J00(S CER CAP 680P 50V J NPO 0603).	0.1	DVT
12	For HDQ70 1.5VALWP ripple voltage is too large.	Because we need to improve the ripple of 1.5VALWP.	0.1	46	Change PC80 from SGA20151330 to SGASGA19331D00.	0.1	DVT
13	For HDQ70, 1.8VP ripple voltage is too large.	Because we need to improve the ripple of 1.8VP.	0.1	46	Change PC84 from SGA20151330 to SGASGA19331D00.	0.1	DVT
14	For HDQ70, change 1.8VP OCP point.	For HDQ70, change 1.8VP OCP point.	0.1	46	Change PR107 from SD034174100(S RES 1/16W 1.74K 0402 1%) to SD034243100(S RES 1/16W 2.43K 0402 1%)	0.1	DVT
15	For HDQ70, change 1.8VP OCP point.	For HDQ70, change 1.8VP OCP point.	0.1	46	Change PR116 from SD034806200(S RES 1/16W 80.6K 0402 1%) to SD034715200(S RES 1/16W 71.5K 0402 1%).	0.1	DVT
16	For HDQ70, fix the 2.5VSP's power sequence.	Because we need to fix the power sequence of 2.5VSP.	0.1	47	Change PC96 from SE075222K00(S CER CAP 2200P 25V +-10% X7R 0402) to SE076473K00(S CER CAP 0.047U 16V K X7R 0402).	0.1	DVT

THIS SHEET OF ENGINEERING DRAWING IS THE PROPRIETARY PROPERTY OF COMPAL ELECTRONICS, INC. AND CONTAINS CONFIDENTIAL AND TRADE SECRET INFORMATION. THIS SHEET MAY NOT BE TRANSFERED FROM THE CUSTODY OF THE COMPETENT DIVISION OF R&D DEPARTMENT EXCEPT AS AUTHORIZED BY COMPAL ELECTRONICS, INC. NEITHER THIS SHEET NOR THE INFORMATION IT CONTAINS MAY BE USED BY OR DISCLOSED TO ANY THIRD PARTY WITHOUT PRIOR WRITTEN CONSENT OF COMPAL ELECTRONICS, INC.

Version change list (P.I.R. List) HW section Page 1 of 1

Item	Reason for change	PG#	Modify List	Date	
1	AC_IN Signal	P.32	Remove R189, D11		DVT(Rev02)
2	LAN LED on 8110SBL	P.26	Unpop R449 on both 8100CL and 8110SBL		DVT(Rev02)
3	Modify +1.8VS and +1.5VS power sequence	P.40	Change R531,R551 value from 100K to 180K		DVT(Rev02)
4	5 Way BTN problem	P.33,34	Add 5WAY_BTN signal and R184		DVT(Rev02)
5	Remove New Card circuit	P.24	Remove New Card Circiut		DVT(Rev02)
6	New Card Clock Request	P.13	Connect PCIE_CLKREQ1# to Clock Gen pin.32		DVT(Rev02)
7	Change IEEE1394 Connector	P.25	Change IEEE1394 Connector Type		DVT(Rev02)
8	Codec VREF capacitor	P.36	Change C497 value from 0.1uf to 10uf		DVT(Rev02)
9	+SD_VCC and +XD_VCC Power Switch	P.23	Add R572, R573 for SD, XD Power Switch		DVT(Rev02)
10	Un-used Codec Clock	P.13	unpoped R89		DVT(Rev02)
11	Un-used ODD Connector	P.21	Remove the JP47 and C362,C366,C675,C678,C681		DVT(Rev02)
12	Add 10uF capacitor on GMCH	P.9	Add C703 on +3VS_DAC		DVT(Rev02)
13	Changed for Speaker and Subwoofer	P.37,38	Change Main Amplifier Gain form 10dB to 8dB, and Modify Woofer BPF value		DVT(Rev02)
14	Change CRT and TV-out Pi Filter Value	P.14	Change CRT and TV-out Pi Filter Value to Following Chipset Recommand		DVT(Rev02)
15	Change DVI SMBUS Pull-up Value	P.16	Change R346,R348 from 30K to 6.8K		DVT(Rev02)
16	Change TV-Tuner Pin98,100 definition	P.29,32,36	Add TV_THERM# signal, Del C81, C82		PVT(Rev03)
17	Change S/PDIF /Headphone Out Pin Define	P.37	Change S/PDIF /Headphone Out Pin Define		PVT(Rev03)
18	Add AMP_MONO for sub-woofer	P.38	Add AMP_MONO signal and C704, R574		PVT(Rev03)
19	Del reserved Audio Jack	P.37	Del JP27, JP31, JP34, JP3		PVT(Rev03)
20	Change Amplifier Gain	P.37	R120 change to 10K, C97 change to 0.01uf		PVT(Rev03)
21	Del reserved USB port	P.31	Del JP23,C390,C385,C386,D5,JP38,C653,C646,C645,D13		PVT(Rev03)
22	Change FAN control circuit	P.39	Change FAN control circuit to GMT G993		PVT(Rev03)
23	Add EMI Solution on AV-In Connector	P.29	Add L32, L33, L34, L35, L36 on AV-IN Signals		PVT(Rev03)
24	Add ESD Diode on MIC Signals	P.37	Add D32 on MIC Signals		PVT(Rev03)
25	Add NBA_PLUG to Disable MONO_OUT	P.36	Connect NBA_PLUG to Disable Codec MONO_OUT when Headphone Plugged		PVT(Rev03)
26	Separate +2.5VS_CRT from +2.5VS	P.9	Add L37,C706,C707,C708,C709.C710		PVT(Rev03)
27	Change ICH6 Crystal Load Capacitor	P.18	Chang C96, C102 from 18P to 10P		PVT(Rev03)
28	Add L38, L39 on Subwoofer Conn. for EMI	P.38	Add L38, L39 on Subwoofer Conn.		PRE-MP(Rev1)
29	Change Speaker 0Ohm Resistor to Bead	P.37	Change R235, R236, R237, R238 to Bead		PRE-MP(Rev1)
30	Add Capacitor for EMI	P.34	Add C711, C712 on T/P Signal		PRE-MP(Rev1)
31	Add 2ND FAN Circuit For TV-Tuner	P.39	Add 2ND FAN Circuit For TV-Tuner		PRE-MP(Rev1)
32	Change RF-Jack Material	P.29	Change RF-Jack Material		PRE-MP(Rev2)

Security Classification	Compal Secret Data		
Issued Date	2005/07/29	Deciphered Date	2006/07/29

THIS SHEET OF ENGINEERING DRAWING IS THE PROPRIETARY PROPERTY OF COMPAL ELECTRONICS, INC. AND CONTAINS CONFIDENTIAL AND TRADE SECRET INFORMATION. THIS SHEET MAY NOT BE TRANSFERED FROM THE CUSTODY OF THE COMPETENT DIVISION OF R&D DEPARTMENT EXCEPT AS AUTHORIZED BY COMPAL ELECTRONICS, INC. NEITHER THIS SHEET NOR THE INFORMATION IT CONTAINS MAY BE USED BY OR DISCLOSED TO ANY THIRD PARTY WITHOUT PRIOR WRITTEN CONSENT OF COMPAL ELECTRONICS, INC.

Compal Electronics, Inc.

Title: SCHEMATIC, M/B LA-2781

Size: B | Document Number: 401353 | Rev: B

Date: 星期日, 一月 01, 2006 | Sheet 50 of 50